Burquip

Red-Line

ORIGINAL Approved AL-KO Distributor PRODUCTS



www.burquip.co.za

Standard High Speed Axles - Up to 2,500kg 04

Standard High Speed Axles With Brakes 04

Standard High Speed Axles Without Brakes 05

Axle Spares 07

Brake Spares 07

Brake Cables & Transmission Components 13

Hub - THUB4 (750kg) 14

Hub - Mini (750kg) 15

Hub - Reno (900kg) 16

Hub - HUB45 (1,500kg) 17

Hub - HUB50RND - SN (1,800kg) 18

Hub - HUB50SQ - LN (2,500kg) 19

Brake Drum 160 (900kg) 20

Brake Drum 2051 (1,500kg) 21

Brake Drum 2052 (1,600kg) 22

Brake Drum 230SN (1,800kg) 23

Brake Drum 230 LN (2,000kg) 24

Grease Caps & Castle Nuts 25

Bearing Kits 26

Braked Couplers 28

Braked Coupler Spares 30

Sigma Coupler Spares 30

Kober Coupler Spares 32

Un-Braked Couplers 34

Tow Balls, Pin Couplers & Accessories 34

Landing Gear 35

Jockey Wheels 35

Parking Jacks 36

Landing Gear Spares 38

Chassis & Components 40

Contact Details 42

Notes

DT - Drill & Tap

C/W - "Comes With"

H/B - Hand Brake

H/D - Heavy Duty

H/H - Hub Face to Hub Face

L/D - Light Duty

L/N - Long Nose

OT - Old Type

RND - Round

SN - Short Nose

S&N - Studs & Nuts

SQ - Square



Explore More Details!

Prices are exclusive of VAT and subject to change without prior notice. (E & OE Notice - pg43)

Full Beam Axles

With Brakes

Stock Code	Load Capacity	Hub/Drum	Beam	Brake	Brake Capacity	H/H	Price Each
AFC45A.10.H/H Alt Code:*BA/45S/H/2052*	1500kg	Optional	□ 45mm	200x50	1500kg	Up to 1500mm	R 6,190
AFC45A.10.H/H Alt Code:*BA/45S/H/2052*	1500kg	Optional	□ 45mm	200x50	1500kg	1501mm to 1675mm	R 6,295
AFC45A.10.H/H Alt Code:*BA/45S/H/2052*	1500kg	Optional	□ 45mm	200x50	1500kg	1676mm to 1965mm	R 6,610
AFC45A.10.H/H Alt Code:*BA/45S/H/2052*	1500kg	Optional	□ 45mm	200x50	1500kg	1966mm to 2200mm	R 6,715
AFC45A.10.H/H Alt Code:*BA/45S/H/2052*	1500kg	Optional	□ 45mm	200x50	1500kg	2201mm to 2360mm	R 6,820
AFC50B.11.H/H Alt Code:*BA/50R/H/2361*	1800kg	Optional	□ 50mm	230x60	1800kg	Up to 1600mm	R 9,340
AFC50B.11.H/H Alt Code:*BA/50R/H/2361*	1800kg	Optional	□ 50mm	230x60	1800kg	1601mm to 1940mm	R 9,340
AFC50B.11.H/H Alt Code:*BA/50R/H/2361*	1800kg	Optional	□ 50mm	230x60	1800kg	1941mm to 2100mm	R 9,865
AFC50B.11.H/H Alt Code:*BA/50R/H/2361*	1800kg	Optional	□ 50mm	230x60	1800kg	2101mm to 2320mm	R 10,075
AFC50A.12.H/H Alt Code:*BA/50S/H/2361*	2500kg	Optional	□ 50mm	230x60	2000kg	Up to 2300mm	R 9,865



When two axles are to be used in tandem, the order must state it.
Where two axles are used in tandem without a load sharing mechanism, the carrying capacity of the combination is reduced by 17%.

Prices are exclusive of VAT and subject to change without prior notice. (E & OE Notice - pg43)

Full Beam Axles

Without Brakes

Stock Code	Load Capacity	Hub	Beam	H/H	Price Each
AF40A.01.H/H.01 Alt Code:*UBA/40R/H/TH04/4X100*	900kg	4/61/100	Ø 40mm	Up to 1500mm	R 2,020
AF40A.01.H/H.01 Alt Code:*UBA/40R/H/TH04/4*	900kg	4/61/100	Ø 40mm	1501mm to 1675mm	R 2,075
AF40A.01.H/H.01 Alt Code:*UBA/40R/H/TH04/4*	900kg	4/61/100	Ø 40mm	1676mm to 1965mm	R 2,200
AF40A.01.H/H.01 Alt Code:*UBA/40R/H/TH04/4*	900kg	4/61/100	Ø 40mm	1966mm to 2200mm	R 2,430
AF40A.01.H/H.01	900kg	4/61/100	Ø 40mm	2201mm to 2360mm	R 2,495
AF45A.06.H/H Alt Code:*UBA45S/H/HB45/PCD*	1500kg	Optional	□ 45mm	Up to 1420mm	R 2,965
AF45A.06.H/H Alt Code:*UBA45S/H/HB45/PCD*	1500kg	Optional	□ 45mm	1421mm to 1450mm	R 3,145
AF45A.06.H/H Alt Code:*UBA45S/H/HB50SN/PCD*	1500kg	Optional	□ 45mm	1451mm to 1575mm	R 3,145
AF45A.06.H/H Alt Code:*UBA45S/H/HB50SN/PCD*	1500kg	Optional	□ 45mm	1576mm to 1805mm	R 3,145
AF45A.06.H/H Alt Code:*UBA45S/H/HB50SN/PCD*	1500kg	Optional	□ 45mm	1806mm to 1850mm	R 3,280
AF45A.06.H/H Alt Code:*UBA45S/H/HB50SN/PCD*	1500kg	Optional	□ 45mm	1851mm to 1940mm	R 3,280
AF45A.06.H/H Alt Code:*UBA45S/H/HB50SN/PCD*	1500kg	Optional	□ 45mm	1941mm to 2040mm	R 3,490
AF45A.06.H/H Alt Code:*UBA45S/H/HB50SN/PCD*	1500kg	Optional	□ 45mm	2041mm to 2100mm	R 3,490
AF45A.06.H/H Alt Code:*UBA45S/H/HB50SN/PCD*	1500kg	Optional	□ 45mm	2101mm to 2200mm	R 3,565
AF45A.06.H/H Alt Code:*UBA45S/H/HB50SN/PCD*	1500kg	Optional	□ 45mm	2201mm to 2240mm	R 3,595
AF45A.06.H/H Alt Code:*UBA45S/H/HB50SN/PCD*	1500kg	Optional	□ 45mm	2241mm to 2350mm	R 3,775



AF40A



AF45A

When two axles are to be used in tandem, the order must state it.
Where two axles are used in tandem without a load sharing mechanism, the carrying capacity of the combination is reduced by 17%.

Prices are exclusive of VAT and subject to change without prior notice. (E & OE Notice - pg43)

Full Beam Axles

Without Brakes

Stock Code	Load Capacity	Hub	Beam	H/H	Price Each
AF50B.06.H/H Alt Code:*UBA50R/H/50SN/PCD*	1800kg	Optional	☐ 50mm	Up to 1740mm	R 3,680
AF50B.06.H/H Alt Code:*UBA50R/H/50SN/PCD*	1800kg	Optional	☐ 50mm	1741mm to 1800mm	R 3,780
AF50B.06.H/H Alt Code:*UBA50R/H/50SN/PCD*	1800kg	Optional	☐ 50mm	1801mm to 1950mm	R 3,920
AF50B.06.H/H Alt Code:*UBA50R/H/50SN/PCD*	1800kg	Optional	☐ 50mm	1951mm to 2050mm	R 3,920
AF50B.06.H/H Alt Code:*UBA50R/H/50SN/PCD*	1800kg	Optional	☐ 50mm	2051mm to 2140mm	R 4,150
AF50B.06.H/H Alt Code:*UBA50R/H/50SN/PCD*	1800kg	Optional	☐ 50mm	2141mm to 2400mm	R 4,640
AF50A.07.H/H Alt Code:*UBA50S/H/HB50/PCD*	2500kg	Optional	☐ 50mm	Up to 1740mm	R 3,985
AF50A.07.H/H Alt Code:*UBA50S/H/HB50/PCD*	2500kg	Optional	☐ 50mm	1741mm to 1800mm	R 4,015
AF50A.07.H/H Alt Code:*UBA50S/H/HB50/PCD*	2500kg	Optional	☐ 50mm	1801mm to 1950mm	R 4,175
AF50A.07.H/H Alt Code:*UBA50S/H/HB50/PCD*	2500kg	Optional	☐ 50mm	1951mm to 2050mm	R 4,385
AF50A.07.H/H Alt Code:*UBA50S/H/HB50/PCD*	2500kg	Optional	☐ 50mm	2051mm to 2140mm	R 4,490
AF50A.07.H/H Alt Code:*UBA50S/H/HB50/PCD*	2500kg	Optional	☐ 50mm	2141mm to 2400mm	R 4,650



AF50B



AF50A

When two axles are to be used in tandem, the order must state it.
Where two axles are used in tandem without a load sharing mechanism, the carrying capacity of the combination is reduced by 17%.

Prices are exclusive of VAT and subject to change without prior notice. (E & OE Notice - pg43)

Brake Spares

Brake Assembly 160

Number	Stock Code	Description	Price Each
	BALK160L AltCode:BASS1636	Brake Assembly 1636 Left	R 970
	BALK160R AltCode:BASS1636	Brake Assembly 1636 Right	R 970
2, 3, 5, 6, 9	**BSALK160KIT01**	160mm Brake Shoe Set C/W Spring Kit AL-KO Original	R 1,170
2, 3, 5, 6, 9	**BSALK160KIT**	160mm Brake Shoe Set C/W Spring Kit AL-KO Generic	R 405
3, 5, 6, 9	**BSALK160.SKIT**	Brake Spring Kit (x1 Brake Shoe Spring, x1 Cam Spring L/R, x2 Pressure Springs), Pressure Spring Retaining Plate (2)	R 116
1	**BSALK160.02** AltCode:1348562	Expander 1637	R80
2	**BSALK160.03** AltCode:1348037	Brake Shoe Bonded 1636	
3	**BSALK160.05** AltCode:1350255	Brake Shoe Spring 1637	
4	**BSALK200.16** AltCode:1348518	Expander Connector 2051 604262	R 38
5	**BSALK200.17** AltCode:1348039	Pressure Spring Retaining Plate (2)	
6	**BSALK160.14.01L** AltCode:1348738	Cam Spring 1637 LH	
6	**BSALK160.14.01R** AltCode:1358411	Cam Spring 1637 RH	
7	**BSALK200.14.02** AltCode:1348048	Cam Pin	R 4.85
8	**BSALK160.14.03L** AltCode:1348678	Cam Assembly Left 1637	R 25
8	**BSALK160.14.03R** AltCode:1348679	Cam Assembly Right 1637	R 25
10, 11, 12	**BSALK200.07** AltCode:1348038	Pressure Spring AL-KO 2088800003 (2)	
9	**BSALK160.25**	Adjustable Barrel & Retainer Spring 160	R 95
10	**BSALK200.25.01** Alt Code: 1348041	Adjustable/Jacking Bolt 21873708	
11	**BSALK200.25.02** Alt Code: 1348681	Barrel Retainer Spring Flat 2051/2361	
12	**BSALK160.25.03** Alt Code: 1350106	Barrel Retainer 160	
13	**BSCRPALK** Alt Code: 1348517	Brake Cable Retaining Plate AL-KO	R 165

NOTES:

Refer to image on the next page.

Prices are exclusive of VAT and subject to change without prior notice. (E & OE Notice - pg43)

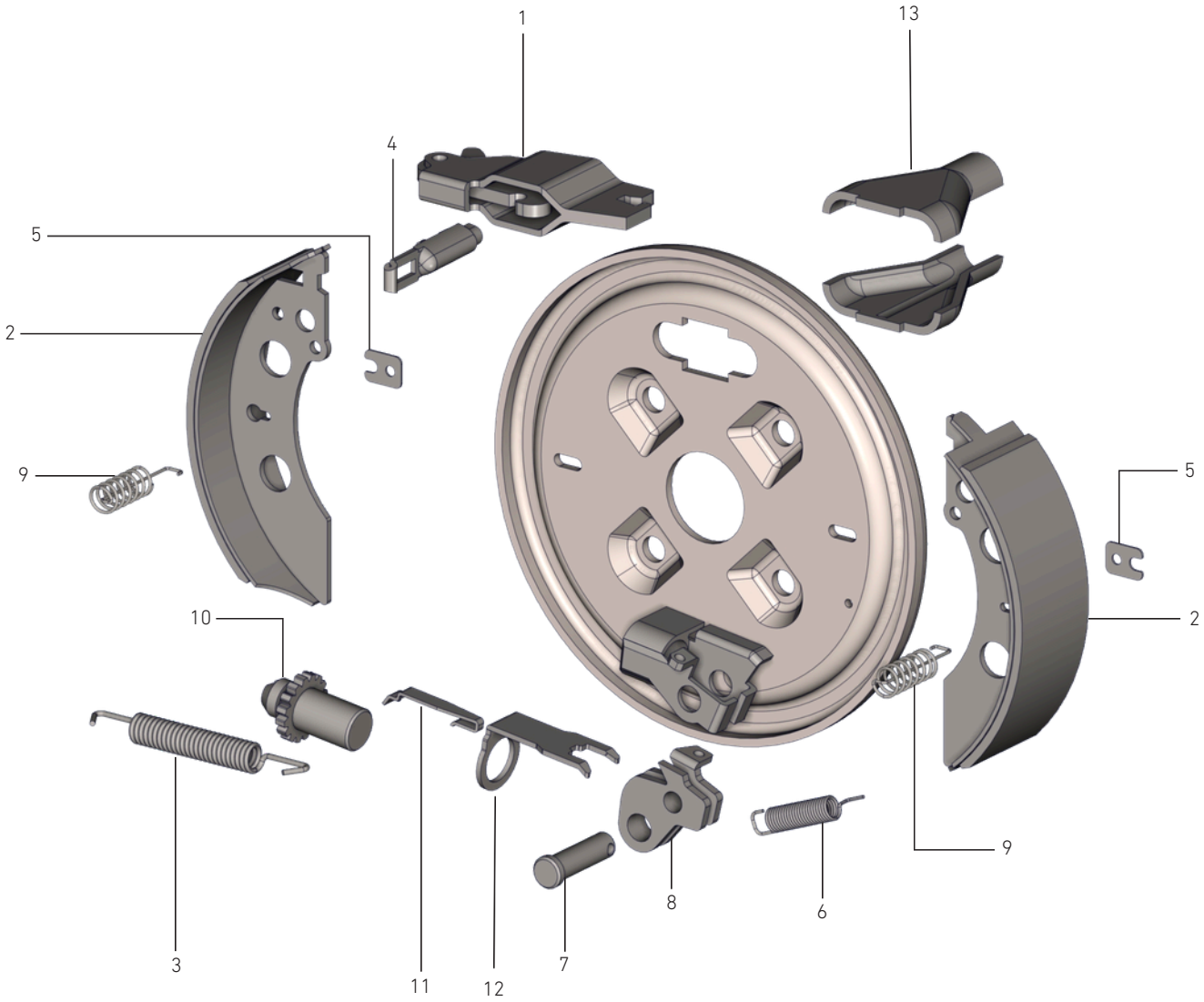
1
13
4
5
2
9
5
10
2
9
3
11
12
7
8
6

Brake Spares

Brake Assembly 200

Number	Stock Code	Description	Price Each
	BALK200L AltCode: BASS2051	Brake Assembly 2051 Left 622640	R 1,120
	BALK200R AltCode: BASS2051	Brake Assembly 2051 Right 622640	R 1,120
2, 3, 5, 6, 9	**BSALK200KIT01**	200mm Brake Shoe Set C/W Spring Kit Original	R 1,250
2, 3, 5, 6, 9	**BSALK200KIT**	200mm Brake Shoe Set C/W Spring Kit Generic	R 436
3, 5, 6, 9	**BSALK200.SKIT**	Brake Spring Kit (x1 Brake Shoe Spring, x2 Pressure Spring Retaining Plates, x1 Cam Spring, x2 Pressure Springs)	R 116
1	**BSALK200.02** Alt Code: 1348563	Expander 2051/2361	R 116
2	**BSALK200.03** Alt Code: 1348070	Brake Shoe Bonded 200	
3	**BSALK200.05** AltCode:1348040	Brake Shoe Spring	
9	**BSALK200.07** AltCode:1348038	Pressure Spring AL-KO 2088800003 (2)	
6	**BSALK200.14.01** AltCode:1348073	Cam Spring 2050	
7	**BSALK200.14.02** AltCode:1348048	Cam Pin	R 4.85
8	**BSALK200.14.03L** AltCode:1348682	Cam Assembly Left 2051/2361	R 33
8	**BSALK200.14.03R** AltCode:1348683	Cam Assembly Right 2051/2361	R 33
4	**BSALK200.16** AltCode:1348518	Expander Connector 2051	R 38
5	**BSALK200.17** AltCode:1348039	Pressure Spring Retaining Plate (2)	
10, 11, 12	**BSALK200.25**	Adjustable Barrel & Retainer Spring 2051/2361	R 95
10	**BSALK200.25.01** AltCode:1348041	Adjustable Barrel/Jacking Bolt	
11	**BSALK200.25.02** AltCode:1348681	Barrel Retainer Spring Flat 2051/2361	
12	**BSALK200.25.03** AltCode:1350106	Barrel Retainer 2051/2361	
13	**BSCRPALK** Alt Code: 1348517	Brake Cable Retaining Plate AL-KO	R 165

NOTES:

Refer to image on the next page.

Prices are exclusive of VAT and subject to change without prior notice. (E & OE Notice - pg43)

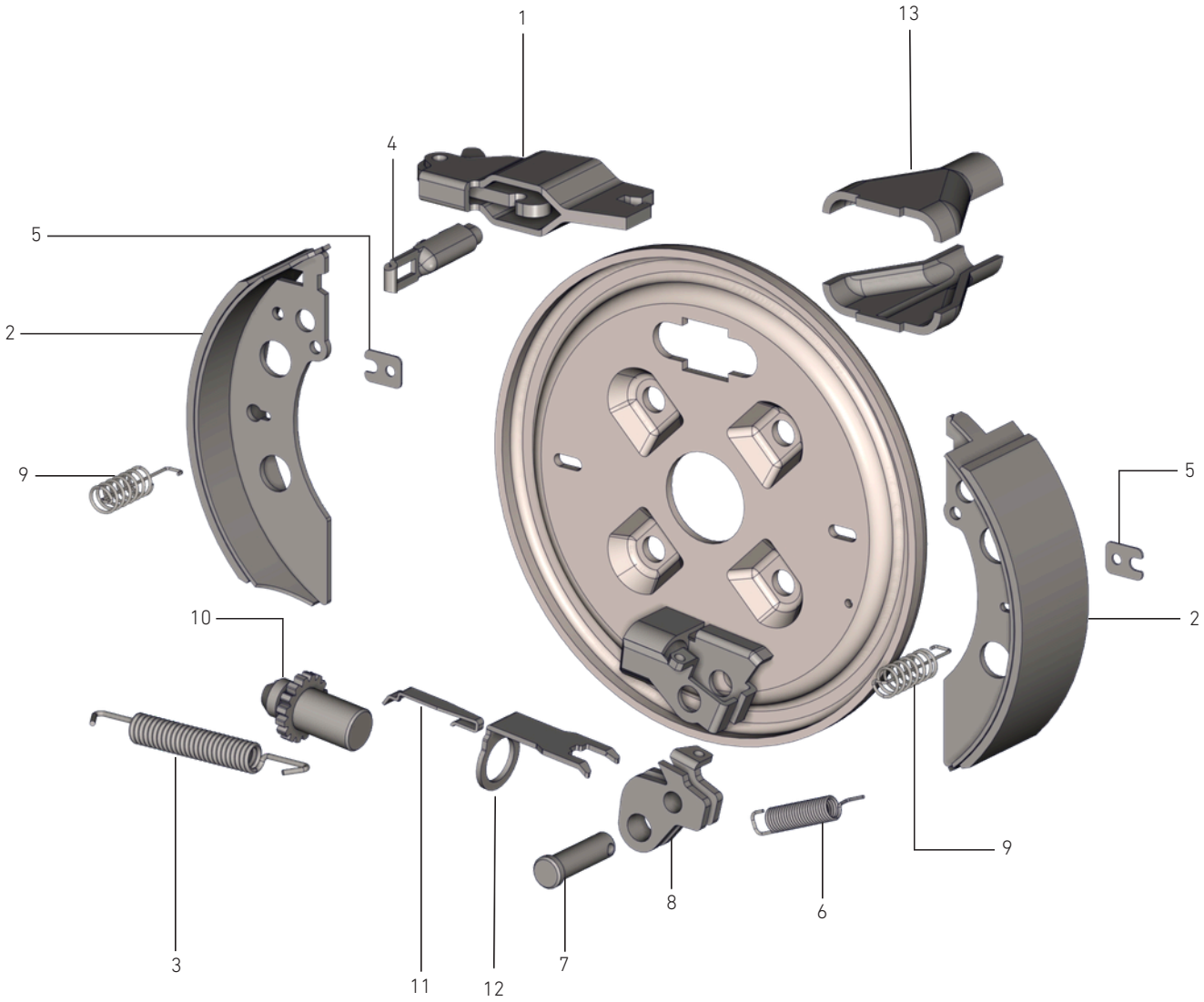
1
13
4
5
2
9
5
2
10
9
3
11
12
7
8
6

Brake Spares

Brake Assembly 230

Number	Stock Code	Description	Price Each
	BALK230L AltCode:BASS2361	Brake Assembly 2361 Left	R 1,610
	BALK230R AltCode:BASS2361	Brake Assembly 2361 Right	R 1,610
2, 3, 5, 6, 9	**BSALK230KIT01**	230mm Brake Shoe Set C/W Spring Kit Original	R 2,495
2, 3, 5, 6, 9	**BSALK230KIT**	230mm Brake Shoe Set C/W Spring Kit Generic	R 730
3, 5, 6, 9	**BSALK200.SKIT**	Brake Spring Kit (x1 Brake Shoe Spring, x2 Pressure Spring Retaining Plates, x1 Cam Spring, x2 Pressure Springs)	R 116
1	**BSALK200.02** AltCode:1348563	Expander	R 116
2	**BSALK230.03** AltCode:1348091	Brake Shoe Bonded 2360	
3	**BSALK200.05** AltCode:1348205	Brake Shoe Spring	
9	**BSALK200.07** AltCode:1348038	Pressure Spring AL-KO 2088800003 (2)	
6	**BSALK200.14.01** AltCode:1348073	Cam Spring	
7	**BSALK200.14.02** AltCode:1348048	Cam Pin	R 4.85
8	**BSALK200.14.03L** AltCode:1348682	Cam Assembly Left	R 33
8	**BSALK200.14.03R** AltCode:1348682	Cam Assembly Right	R 33
4	**BSALK200.16** AltCode:1348518	Expander Connector	R 38
10, 151, 12	**BSALK200.17** AltCode:1348039	Pressure Spring Retaining Plate (2)	
	BSALK200.25	Adjustable Barrel & Retainer Spring	R 95
10	**BSALK200.25.01** AltCode:1348041	Adjustable Barrel/Jacking Bolt	
11	**BSALK200.25.02** AltCode:1348681	Barrel Retainer Spring Flat	
12	**BSALK200.25.03** AltCode:1350106	Barrel Retainer	
13	**BSCRPALK** Alt Code: 1348517	Brake Cable Retaining Plate AL-KO	R 165

NOTES:

Refer to image on the next page.

Prices are exclusive of VAT and subject to change without prior notice. (E & OE Notice - pg43)

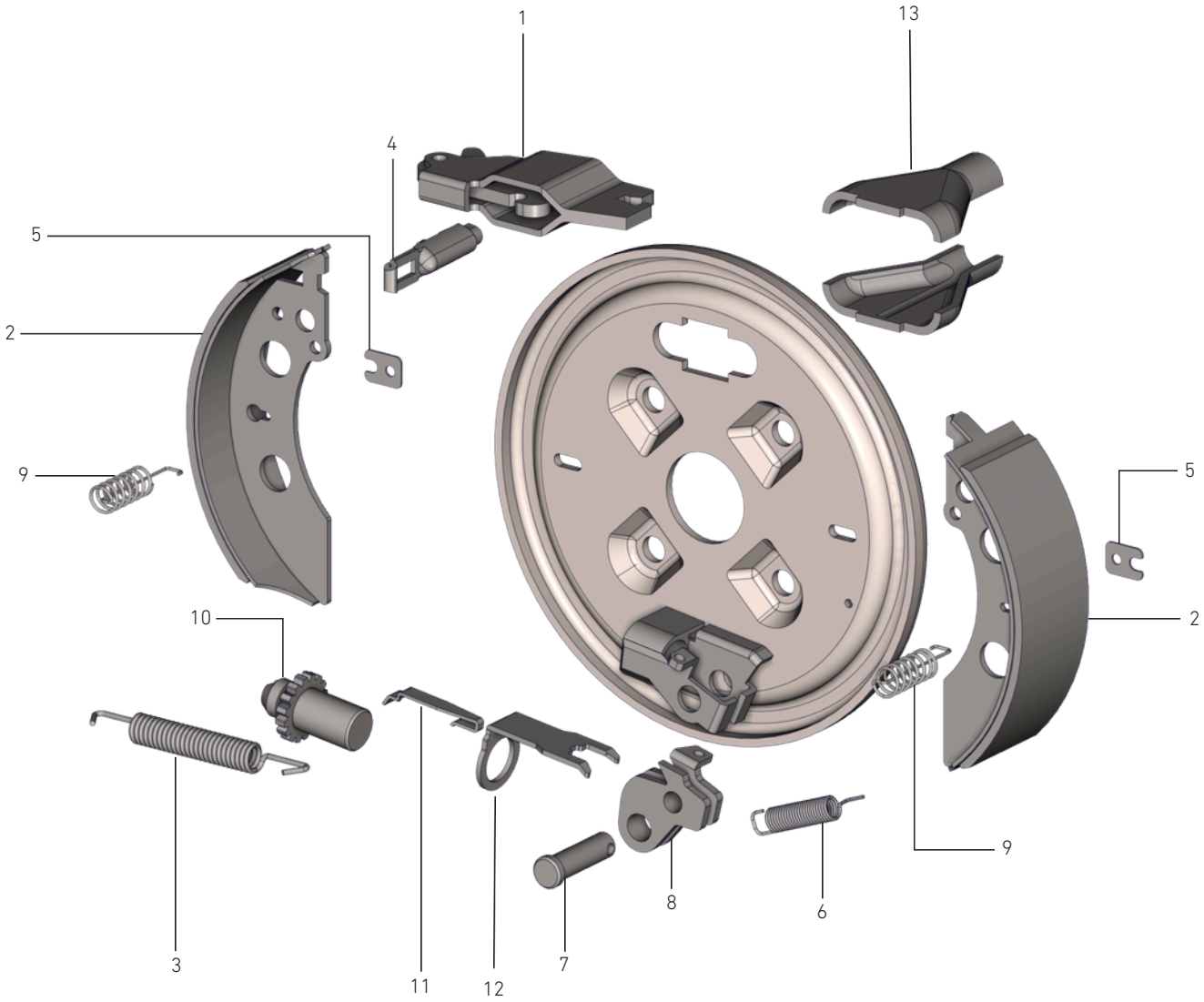
1
13
4
5
2
9
5
2
10
9
3
11
12
7
8
6

Brake Cables & Transmission Components

Image	Stock Code	Description	Price
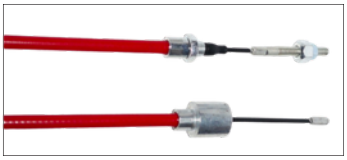	**BCALK1120** AltCode: 1358392	Bowden Cable 1120mm Bell ID:23.5	R 225
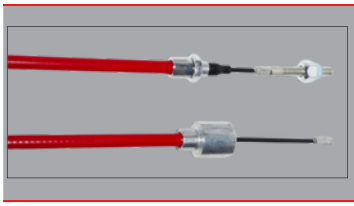	**BCALK1350** Alt Code: 1358394	Bowden Cable 1350mm Bell ID:23.5	R 225
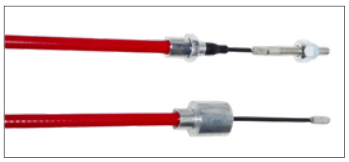	**BCALK1530** AltCode: 299713	Bowden Cable 1530mm Bell ID:23.5	R 225
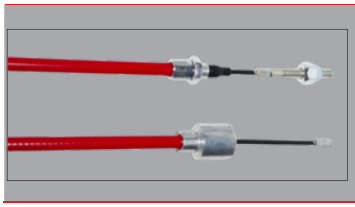	**BCALK1650** Alt Code: 1358396	Bowden Cable 1650mm Bell ID:23.5	R 225
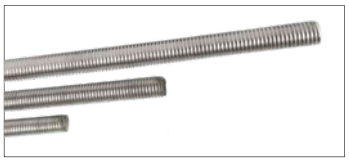	**M10RB.1700** Alt Code: 1348236	M10 Brake Rod 1700mm	R 73
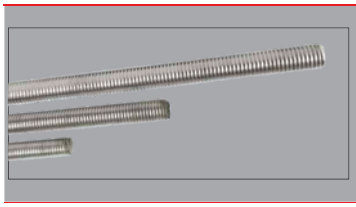	**M10RB.2000** Alt Code: 1348240	M10 Brake Rod 2000mm	R 108
	M10RB.2500 Alt Code: 1348242	M10 Brake Rod 2500mm	R 113
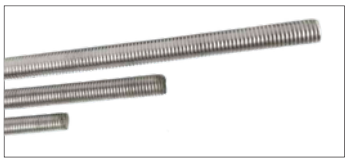	**M10RB.3000** Alt Code: 1348244	M10 Brake Rod 3000mm	R 157
	M10RB.3400 Alt Code: 1348246	M10 Brake Rod 3400mm	R 205
	M10RB.3800 Alt Code: 1348238	M10 Brake Rod 3800mm	R 235
	**M10BRS** Alt Code: BRAKERODSLEEVEM10	M10 Brake Rod Sleeve	R 29
	**BC01** Alt Code: 1348033	Equaliser Bracket Tandem	R 221
	BC02 Alt Code: 1348032	Compensator Single	R 90

Prices are exclusive of VAT and subject to change without prior notice. (E & OE Notice - pg43)

Hubs - THUB4

750kg Unbraked Axles
Bearing Kit 07

Number	Stock Code	Hub Code	Description	Price Each
	HUALK0450.01C AltCode:THUB4X100_BF	**01**	Complete Hub 4/100 pcd only DT, hub excludes spindle	R 435
	HUALK0450.02C	**02**	Complete Hub 5/114 pcd only DT, hub excludes spindle	R 455
1	**GCAP48.1T**		Grease Cap 48mm	
2	**M4X40SP**		M3,2mm Split Pin	
3	**M16CN** AltCode:1348021		M16 Castle Nut M16x1,5	
4	**B45449\10**		Inner Bearing 45449\10	
5	**B11749\10** AltCode:1248002		Outer Bearing 11749\10	
6	**M12WB24**		M12 Wheel Bolt 1,5mm	
7	**OS38-52-7**		Oil Seal 38x52x7	

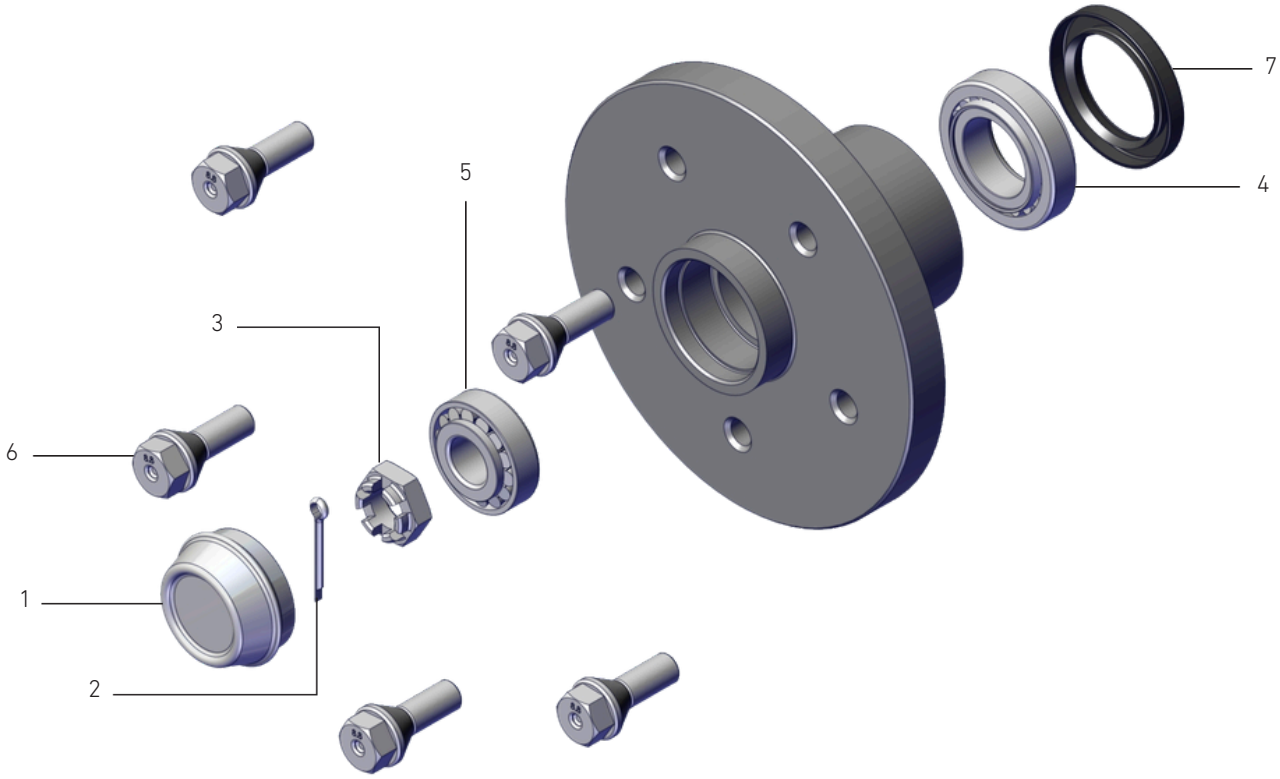

Prices are exclusive of VAT and subject to change without prior notice. (E & OE Notice - pg43)

Hub - Mini

750kgUnbraked Axles
Bearing Kit 06

Number	Stock Code	Hub Code	Description	Price Each
	HUR0450.01SC AltCode:HUB/MINI/BN5330	**03**	Complete Hub 4/100 pcd only S&N, hub excludes spindle	R 560
1	**GCAP50.1T** AltCode:GCAP50		Grease Cap 50.1mm	
2	**M4X40SP** AltCode:1348022		M4mm Split Pin	
3	**M22X1.5CN** AltCode:1350035		M22 Castle Nut M22	
4	**B44649\10** AltCode:Bearing44649/10		Inner Bearing 44649/10	
5	**B44649\10** AltCode:Bearing44649/10		Outer Bearing 44649/10	
6	**M12WS** AltCode:WHEELSTUDM12		M12 Wheel Stud 1,5mm	
7	**M12WN** AltCode:1348079		M12 Wheel Nut 1,5mm	
8	**OS38-52-7** AltCode:1348094		Oil Seal 38x52x7	

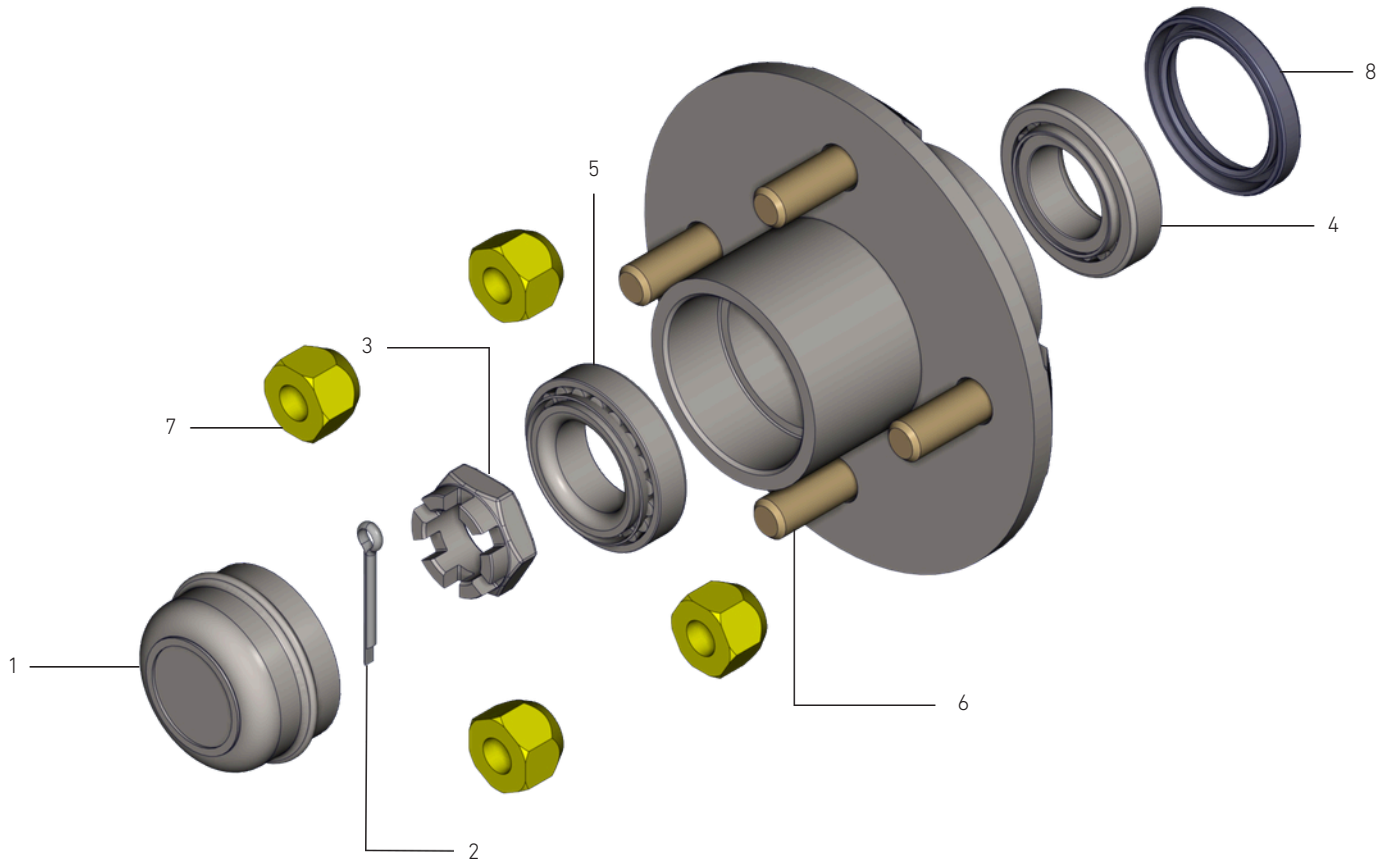

Prices are exclusive of VAT and subject to change without prior notice. (E & OE Notice - pg43)

Hubs - Reno

900kg Unbraked Axles
Bearing Kit 05

Number	Stock Code	Hub Code	Description	Price Each
	HUREN0450.01SC Alt Code: HUB/RENO/BN5331	**04**	Complete Hub 4/100 pcd S&N, hub excludes spindle	R 780
	HUREN0450.02SC AltCode:HUB/RENO/BN5331	**04**	Complete Hub 5/114 pcd S&N, hub excludes spindle	R 780
1	**GCAP50.1T**		Grease Cap 50.1mm	
2	**M4X40SP** AltCode:1348022		M4mm Split Pin	
3	**M22X1.5CN** AltCode:1350035		M22 Castle Nut M22x1,5	
4	**B67048\10** AltCode:BEARING67048/10		Inner Bearing 67048/10	
5	**B44649\10** AltCode:Bearing44649/10		Outer Bearing 44649/10	
6	**M12WS** AltCode:WHEELSTUDM12		M12 Wheel Stud 1,5mm	
7	**M12WN** AltCode:1348079		M12 Wheel Nut 1,5mm	
8	**OS38-60-10** AltCode:1350033		Oil Seal 38x60x10	

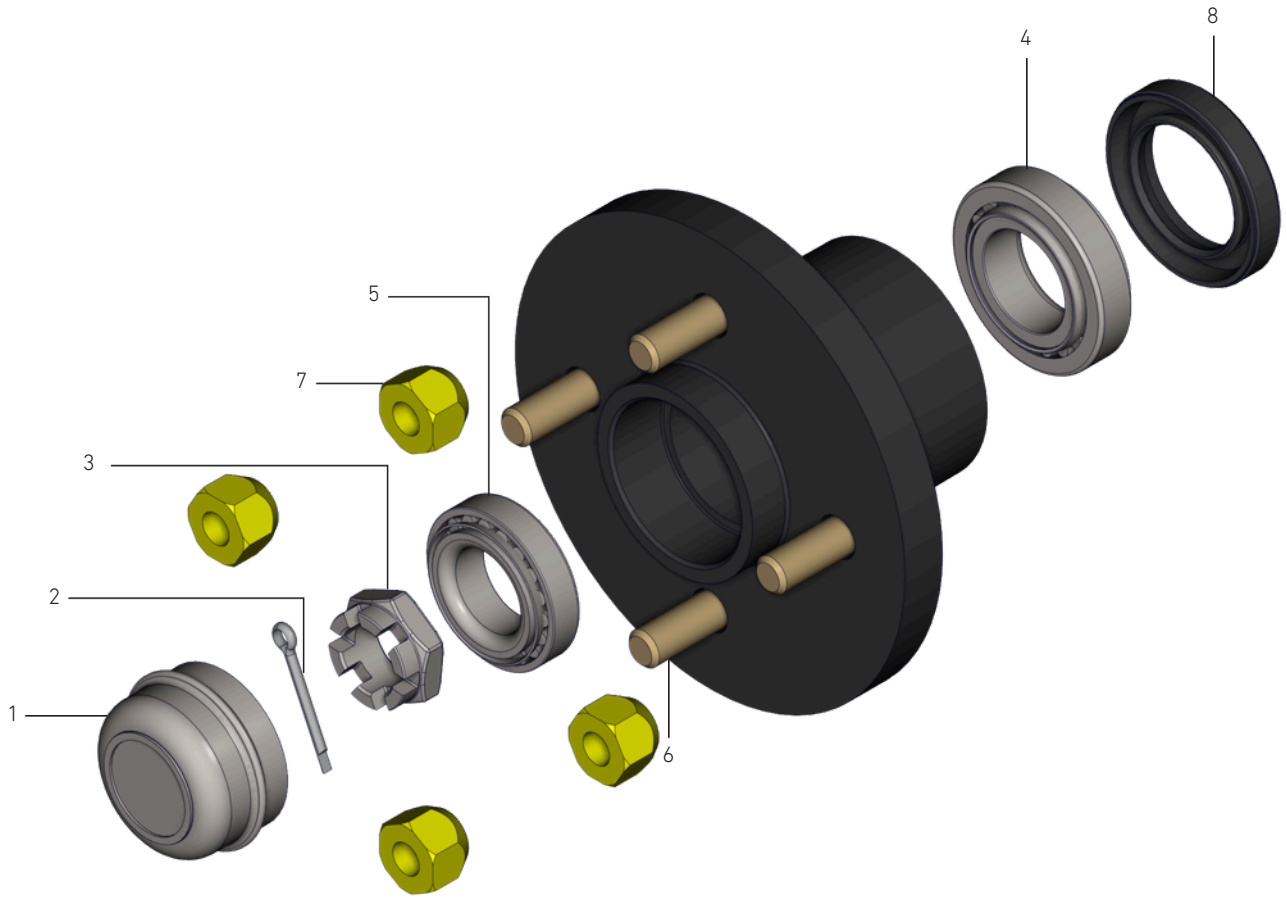

Prices are exclusive of VAT and subject to change without prior notice. (E & OE Notice - pg43)

Hubs - HUB45

1500kg UnbrakedAxles
Bearing Kit 08

Number	Stock Code	Hub Code	Description	Price Each
	HUALK0750.01C Alt Code: HUB45/DT	**05**	Complete Hub 4/100 pcd DT, hub excludes spindle	R 720
	HUALK0750.02C Alt Code: HUB45/DT	**05**	Complete Hub 5/114 pcd DT, hub excludes spindle	R 730
	HUALK0750.04C Alt Code: HUB45/DT	**05**	Complete Hub 6/140 pcd DT, hub excludes spindle	R 740
	HUALK0750.02SC Alt Code: HUB45/PS	**05**	Complete Hub 5/114 pcd S&N, hub excludes spindle	R 730
	HUALK0750.04SC	**05**	Complete Hub 6/140 pcd S&N, hub excludes spindle	R 740
1	**GCAP48.1T** Alt Code: GCAP48		Grease Cap 48mm	
2	**M4X40SP** AltCode:1348022		M3,2mm Split Pin	
3	**M18CN** AltCode:1348065		M18 Castle Nut M18x1,5	
4	**B67048/10** AltCode:BEARING67048/10		Inner Bearing 67048/10	
5	**B11949/10** AltCode:1348064		Outer Bearing 11949/10	
6	**M12WB24** AltCode:1348016		M12 Wheel Bolt 1,5mm	
	M12WS AltCode:WHEELSTUDM12		M12 Wheel Stud 1.5mm	
	M12WN AltCode:1348079		M12 Wheel Nut 1.5mm	
7	**OS42-62-7** AltCode:Os4262		Oil Seal 42x62x7	

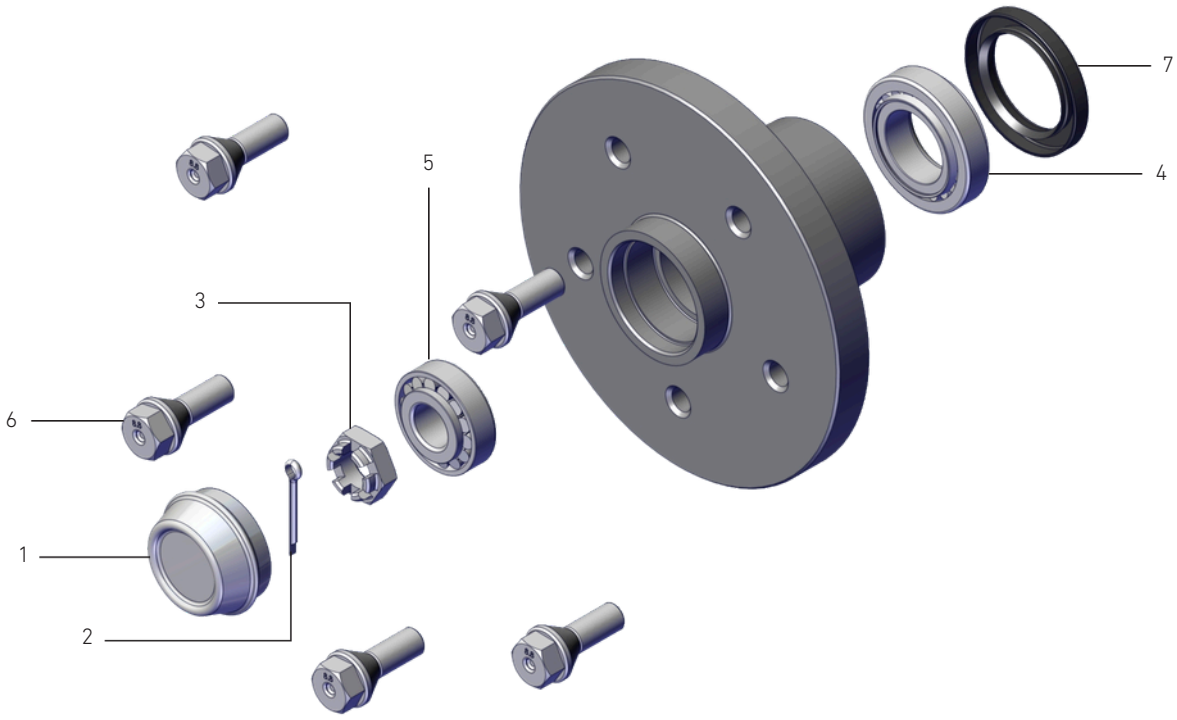

Prices are exclusive of VAT and subject to change without prior notice. (E & OE Notice - pg43)

Hubs - HUB50 RND - SN

1800kg UnbrakedAxles
Bearing Kit 09

Number	Stock Code	Hub Code	Description	Price Each
	HUALK1000.06.01C Alt Code: HUB50RND/SN/DT	**06**	Complete Hub 4/100 pcd DT, hub excludes spindle	R 910
	HUALK1000.06.02C Alt Code: HUB50RND/SN/DT_5X114	**06**	Complete Hub 5/114 pcd DT, hub excludes spindle	R 910
	HUALK1000.06.04C	**06**	Complete Hub 6/140 pcd DT, hub excludes spindle	R 930
	HUALK1000.06.02SC	**06**	Complete Hub 5/114 pcd S&N, hub excludes spindle	R 910
	HUALK1000.06.04SC	**06**	Complete Hub 6/140 pcd S&N, hub excludes spindle	R 930
1	**GCAP48.1T**		Grease Cap 48mm	
2	**M4x40SP** AltCode:1348022		M4mm Split Pin	
3	**M24X2.0CN** AltCode:1348092		M24 Castle Nut M24x2.0 (M18CN Pre-2025)	
4	**B32007** AltCode:BEARING32007		Inner Bearing 32007	
5	**B32005** AltCode:BEARING32005		Outer Bearing 32005	
6	**M12WB24** AltCode:1348016		M12 Wheel Bolt 1,5mm	
	M12WS AltCode:WHEELSTUDM12		M12 Wheel Stud 1,5mm	
	M12WN AltCode:1348079		M12 Wheel Nut 1,5mm	
7	**OS42-62-7**		Oil Seal 42x62x7	

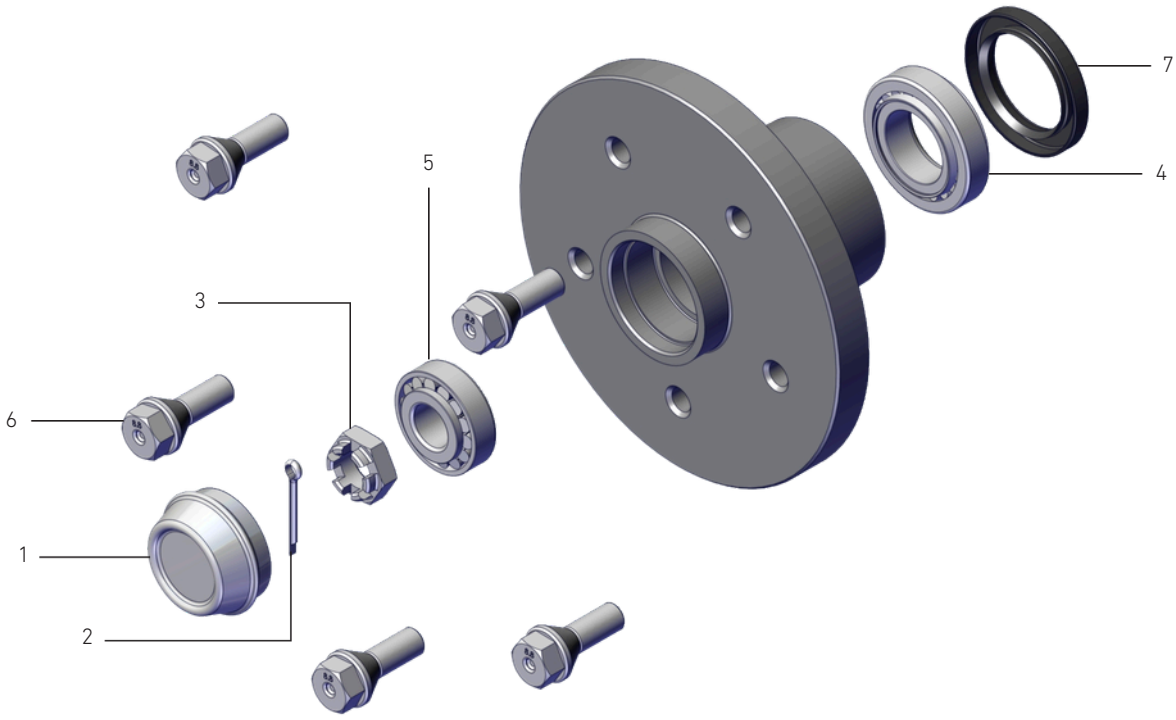

Prices are exclusive of VAT and subject to change without prior notice. (E & OE Notice - pg43)

Hubs - HUB50 SQ - LN

2500kg UnbrakedAxles
Bearing Kit 10

Number	Stock Code	Hub Code	Description	Price Each
	HUALK1000.07.02C Alt Code: HUB50SQ/LN/DT_5X114	**07**	Complete Hub 5/114 pcd DT, 2500kg unbraked axles	R 1,035
	HUALK1000.07.02SC Alt Code: HUB50SQ/LN/PS_5X114	**07**	Complete Hub 5/114 pcd S&N, 2500kg unbraked axles	R 1,035
	HUALK1000.07.03SC	**07**	Complete Hub 5/165 pcd S&N, 2500kg unbraked axles	R 1,035
	HUALK1000.07.04SC Alt Code: HUB50SQ/LN/PS_6X140	**07**	Complete Hub 6/140 pcd S&N, 2500kg unbraked axles	R 1,045
1	**GCAP56.1T** Alt Code: GCAP56		Grease Cap 55mm	
2	**M4X40SP**		M3.2 Split Pin	
3	**M24X2.0CN**		M24 Castle Nut M24x2.0 (M18CN Pre-2025)	
4	**B32008** Alt Code: BEARING32008		Inner Bearing 32008	
5	**B32006** Alt Code: BEARING32006		Outer Bearing 32006	
6	**M16WS** Alt Code: 1348271		M16 Wheel Studs 1.5mm	
7	**M16WN** Alt Code: 1348270		M16 Wheel Nut 1.5mm	
	M12WS Alt Code: WHEELSTUDM12		M12 Wheel Studs 1.5mm	
	M12WN Alt Code: 1348079		M12 Wheel Nuts 1.5mm	
8	**OS45-72-10**		Oil Seal 45x72x10	

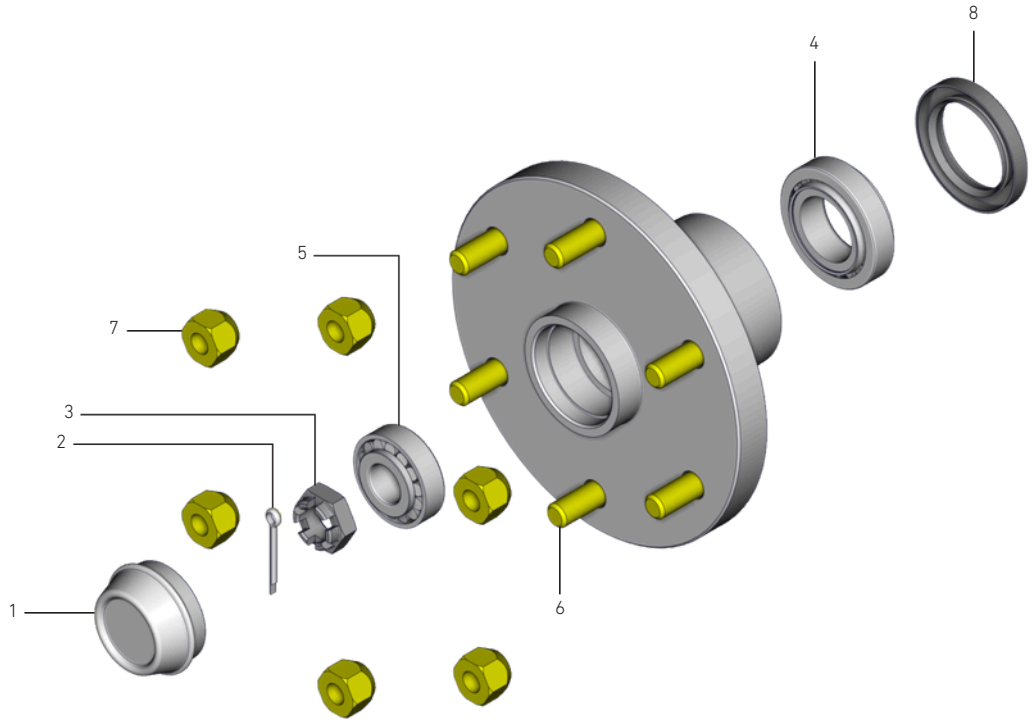

Prices are exclusive of VAT and subject to change without prior notice. (E & OE Notice - pg43)

Brake Drums 160

900kg Axle
Bearing Kit 07

Number	Stock Code	Hub Code	Description	Price Each
	HBALK160.01C Alt Code: BDRUM160/DT	**08**	160mm Complete Brake Drum 4/100 pcd DT	R 1,300
1	**GCAP48.1T** Alt Code: GCAP48		Grease Cap 48mm	
2	**M4X40SP** Alt Code: 1348022		M3.2 Split Pin	
3	**M16CN** AltCode:1348021		M16 Castle Nut M16x1.5	
4	**B45449\10** AltCode:BEARING45449/10		Inner Bearing 45449/10	
5	**B11749\10** AltCode:BEARING11749/10		Outer Bearing 11749/10	
6	**M12WB24** Alt Code: 1348016		M12 Wheel Bolt 1,5mm	
7	**OS38-52-7** Alt Code: 1348094		Oil Seal 38x52x7	

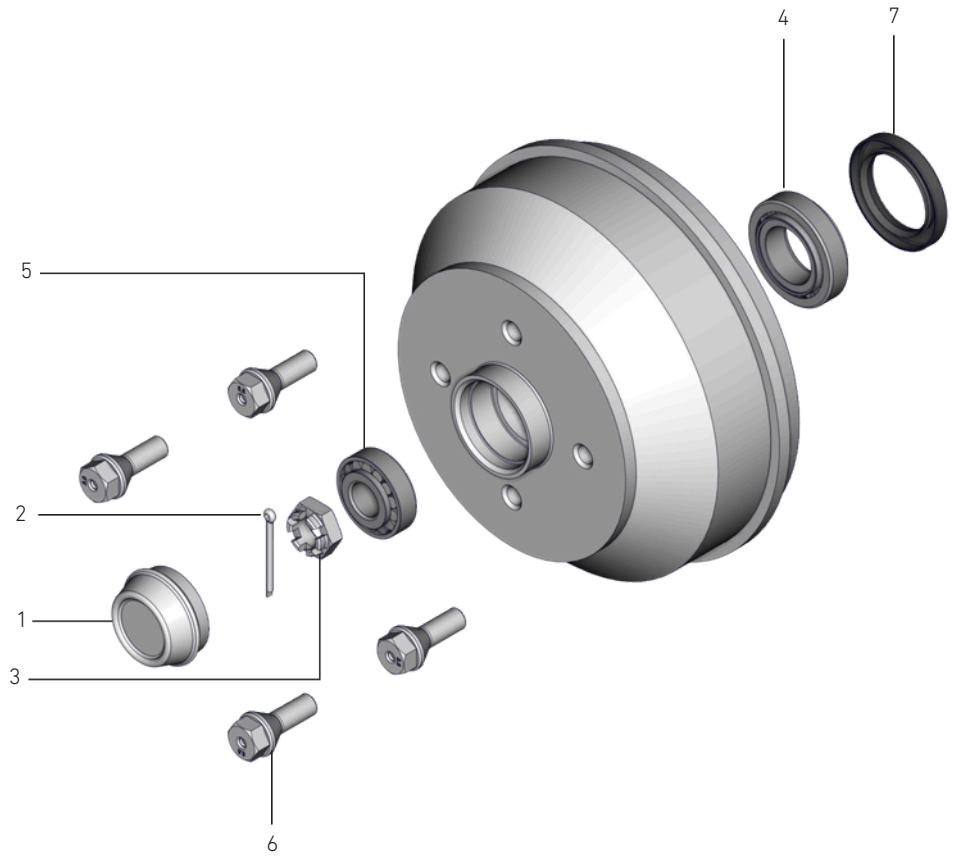

Prices are exclusive of VAT and subject to change without prior notice. (E & OE Notice - pg43)

Brake Drums 2051

1500kg Axle
Bearing Kit 08

Number	Stock Code	Hub Code	Description	Price Each
	HBALK200.09.01C	**09**	Complete Brake Drum 4/100 pcd DT	R 1,045
	HBALK200.09.02C	**09**	Complete Brake Drum 5/114 pcd DT	R 1,045
	HBALK200.09.02SC	**09**	Complete Brake Drum 5/114 pcd S&N	R 1,045
	HBALK200.09.04C	**09**	Complete Brake Drum 6/139.7 pcd DT	R 1,045
	HBALK200.09.04SC	**09**	Complete Brake Drum 6/139.7 pcd S&N	R 1,045
1	**GCAP48.1T** Alt Code: GCAP48		Grease Cap 48mm	
2	**M4X40SP**		M3.2 Split Pin	
3	**M18CN** AltCode:1348065		M18 Castle Nut M18x1,5	
4	**B67048/10** AltCode:BEARING67048/10		Inner Bearing 67048/10	
5	**B11949/10**		Outer Bearing 11949/10	
6	**M12WB24** Alt Code: 1348016		M12 Wheel Bolt 1,5mm	
7	**OS42-62-7** Alt Code: Os4262		Oil Seal 42x62x7	

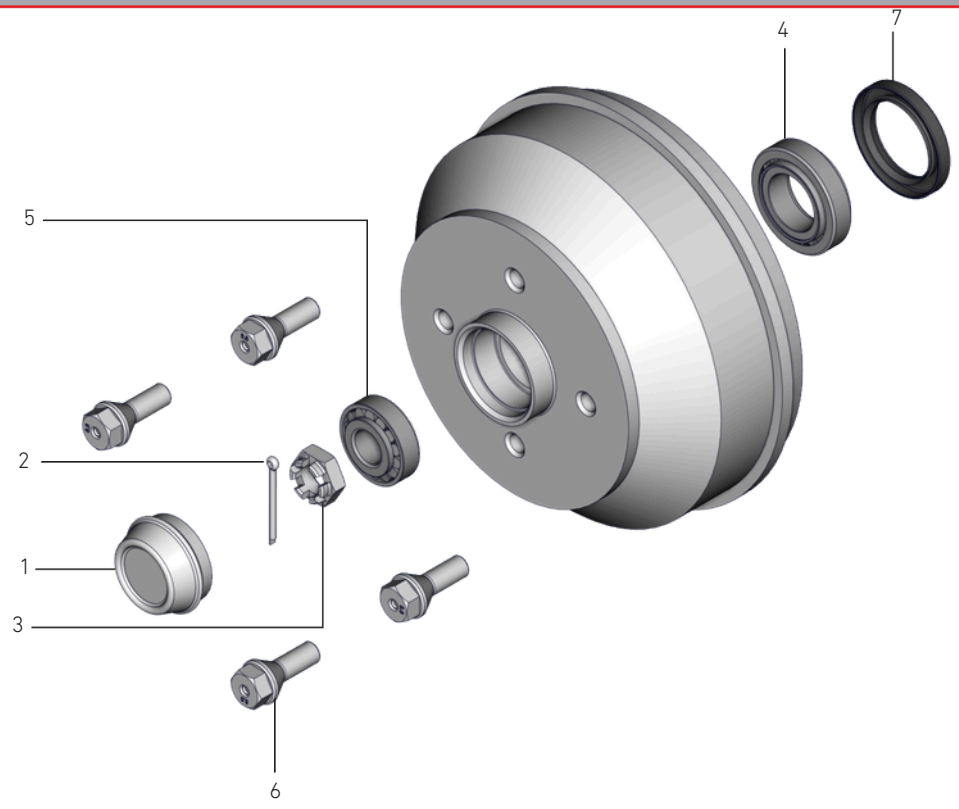

Prices are exclusive of VAT and subject to change without prior notice. (E & OE Notice - pg43)

Brake Drums 2052

1600kg Axle
Bearing Kit 09

Number	Stock Code	Hub Code	Description	Price Each
	HBALK200.10.01C	**10**	Complete Brake Drum 4/100 pcd DT	R 1,045
	HBALK200.10.02C	**10**	Complete Brake Drum 5/114 pcd DT	R 1,045
	HBALK200.10.02SC	**10**	Complete Brake Drum 5/114 pcd S&N	R 1,045
	HBALK200.10.04SC Alt Code: BDRUM2052/PS_6X140	**10**	Complete Brake Drum 6/140 pcd S&N	R 1,045
1	**GCAP48.1T** Alt Code: GCAP48		Grease Cap 48mm	
2	**M4X40SP** Alt Code: 1348022		M4 Split Pin	
3	**M24X2.0CN** Alt Code: 1348092		M24 Castle Nut M24x2.0 (M18CN Pre-2025)	
4	**B32007** AltCode:BEARING32007		Inner Bearing 32007	
5	**B32005** AltCode:BEARING32005		Outer Bearing 32005	
	M12WB24		M12 Wheel Bolt 1,5mm	
6	**M12WS** AltCode:WHEELSTUDM12		M12 Wheel Studs 1,5mm	
7	**M12WN** AltCode:1348079		M12 Wheel Nuts 1,5mm	
8	**OS42-62-7** Alt Code: Os4262		Oil Seal 42x62x7	

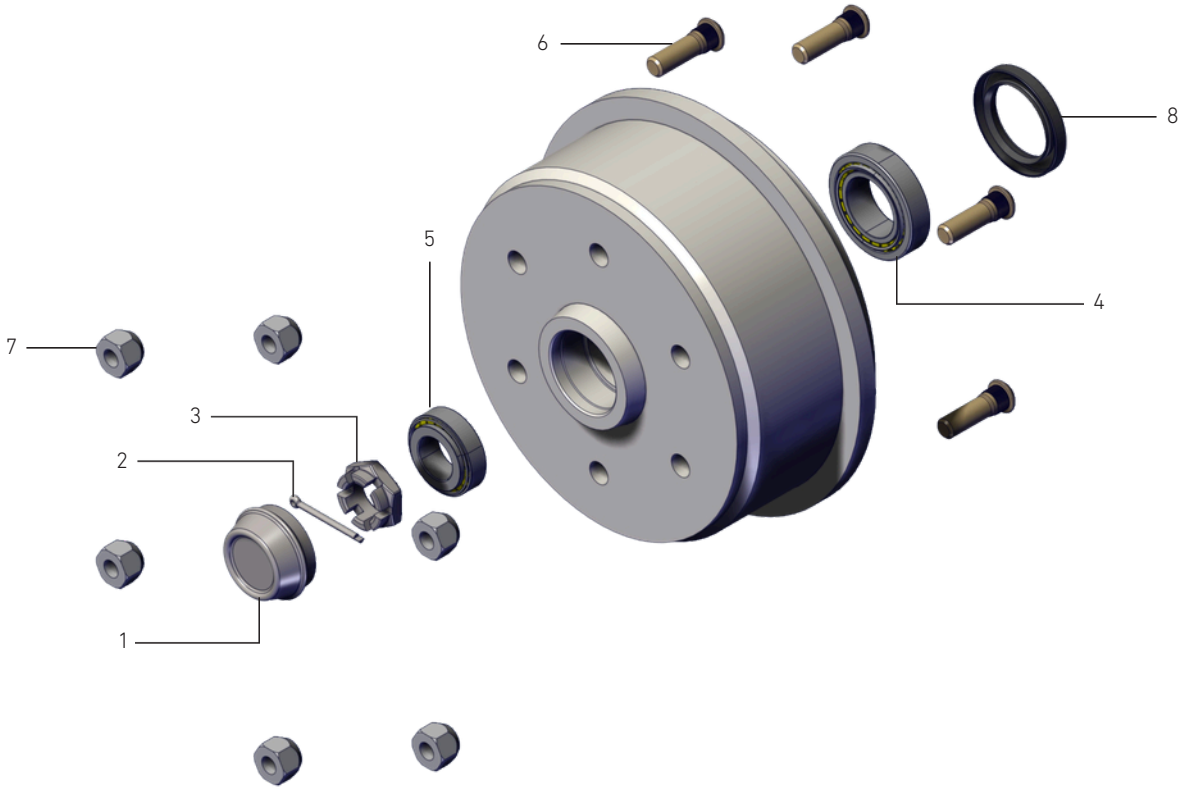

Prices are exclusive of VAT and subject to change without prior notice. (E & OE Notice - pg43)

Brake Drums 230 SN

1800kg Axle
Bearing Kit 09

Number	Stock Code	Hub Code	Description	Price Each
	HBALK230.11.02C	**11**	Complete Brake Drum 5/114 pcd DT	R 1,150
	HBALK230.11.02SC Alt Code: BDRUM230SN/PS	**11**	Complete Brake Drum 5/114 pcd S&N	R 1,150
	HBALK230.11.04SC Alt Code: BDRUM230SN/PS_6X140	**11**	Complete Brake Drum 6/140 pcd S&N	R 1,190
1	**GCAP48.1T** Alt Code: GCAP48		Grease Cap 48mm	
2	**M4X40SP** Alt Code: 1348022		M4 Split Pin	
3	**M24X2.0CN** Alt Code: 1348092		M24 Castle Nut M24x2.0 (M18CN Pre-2025)	
4	**B32007** AltCode:BEARING32007		Inner Bearing 32007	
5	**B32005** AltCode:BEARING32005		Outer Bearing 32005	
	M12WB24		M12 Wheel Bolt 1,5mm	
6	**M12WS** AltCode:WHEELSTUDM12		M12 Wheel Studs 1,5mm	
7	**M12WN** AltCode:1348079		M12 Wheel Nuts 1,5mm	
8	**OS42-62-7** Alt Code: Os4262		Oil Seal 42x62x7	

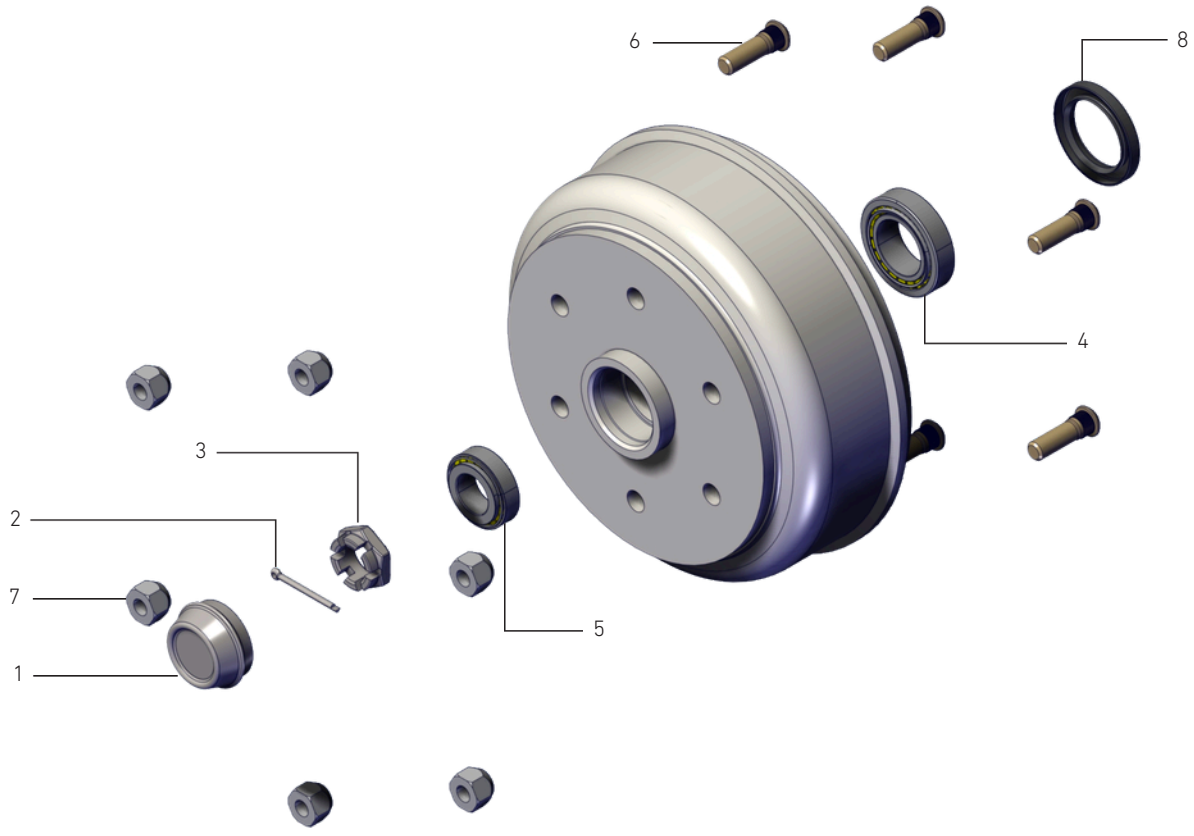

Prices are exclusive of VAT and subject to change without prior notice. (E & OE Notice - pg43)

Brake Drums 230 LN

2000kg Axle
Bearing Kit 10

Number	Stock Code	Hub Code	Description	Price Each
	HBALK230.12.02C AltCode:BDRUM230LN/DT_5X114	**12**	Complete Brake Drum 5/114 pcd DT	R 1,350
	HBALK230.12.02SC	**12**	Complete Brake Drum 5/114 pcd S&N	R 1,350
	HBALK230.12.03SC AltCode:BDRUM230LNPS5X165M16	**12**	Complete Brake Drum 5/165 pcd S&N	R 1,360
	HBALK230.12.04SC	**12**	Complete Brake Drum 6/140 pcd S&N	R 1,360
1	**GCAP56.1T**		Grease Cap 55mm	
2	**M4X40SP** Alt Code: 1348022		M3.2 Split Pin	
3	**M24X2.0CN** Alt Code: 1348092		M24 Castle Nut M24x2.0	
4	**B32008** AltCode:BEARING32008		Inner Bearing 32008	
5	**B32006** AltCode:BEARING32006		Outer Bearing 32006	
	M12WB24 Alt Code: 1348016		M12 Wheel Bolt 1,5mm	
6	**M12WS** AltCode:WHEELSTUDM12		M12 Wheel Studs 1,5mm	
7	**M12WN** AltCode:1348079		M12 Wheel Nuts 1,5mm	
	M16WS AltCode:1348271		M16 Wheel Studs 1,5mm	
	M16WN AltCode:1348270		M16 Wheel Nuts 1,5mm	
8	**OS45-72-10** Alt Code: 1348439		Oil Seal 45x72x10	

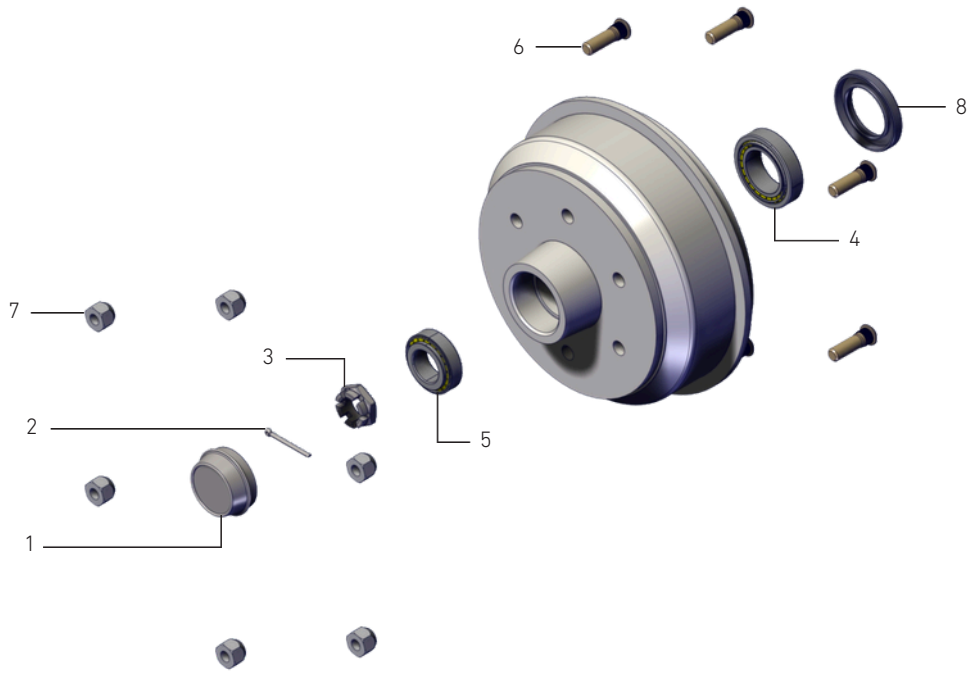

Prices are exclusive of VAT and subject to change without prior notice. (E & OE Notice - pg43)

Grease Caps

Stock Code	Alt Code	Description	Price Each
GCAP48.1T.01	GCAP48	Grease Cap 48mm	R 30
GCAP50.1T.01	GCAP50	Grease Cap 50mm	R 110
GCAP55E.1T.01	GCAP55E	Grease Cap 55 Euro	R 120
GCAP56.1T.01	GCAP56	Grease Cap 56mm	R 245

Castle Nuts

Stock Code	Alt Code	Description	Price Each
M16CN	1348021	Castle Nut M16 x 1.5	R 23
M18CN	1348065	Castle Nut M18 x 1.5	R 23
M22X1.5CN	1350035	Castle Nut M22 x 1.5	R 32
M24X2.0CN	1348092	Castle Nut M24 x 2.0	R 37



Grease Caps



Castle Nuts

Prices are exclusive of VAT and subject to change without prior notice. (E & OE Notice - pg43)

Bearing Kits

Kit	Components	Description	Qty	ID (mm)	OD (mm)	Grease Cap (i)	Application	Price Each
BKIT05 Alt Code: 1248009	B44649\10	Bearing 44610/49	1	27.0	50.0	Ø 50mm	Venter: 40mm Unbraked Axle 4/100 Rubax: Reno Hub	R 265
	B67048\10	Bearing 67048/10	1	31.7	59.1			
	OS40-60-10	Seal 40-60-10	1	40.0	60.0			
	M4X40SP	Split Pin 4X40	1	-	-			
BKIT06 Alt Code: 1248008	B44649\10	Bearing 44610/49	2	27.0	50.0	Ø 50mm	Venter: 40mm Square Unbraked 4/100 Mini Hub	R 190
	OS38-52-7	Bearing 38-52-7	1	38.0	52.0			
	M4X40SP	Spit Pin 4x40	1	-	-			
BKIT07 Alt Code: 1248003	B11749\10	Bearing 11749/10	1	17.0	40.0	Ø 48mm	Trailco: 40mm Braked Axle 40mm Unbraked Axle	R 195
	B45449\10	Bearing 45449/10	1	29.0	50.3			
	OS38-52-7	Seal 38-52-7	1	38.0	52.0			
	M4X40SP	Split Pin 4X40	1					
BKIT08 Alt Code: 1248004	B11949\10	Bearing 11949/10	1	19.0	45.2	Ø 48mm	Trailco: 45mm Braked/ Unbraked Axle 5/114.3 or 4/100	R 205
	B67048\10	Bearing 67048/10	1	31.7	59.1			
	OS42-62-7	Seal 42-62-7	1	42.0	62.0			
	M4X40SP	Split Pin 4X40	1	-	-			
BKIT09 Alt Code: 1248006	B32005	Bearing 32005	1	25.0	47.0	Ø 48mm	Trailco: 45mm Braked 6/139.7 50mm Round Unbraked 9" Braked Axle Short Nose	R 240
	B32007	Bearing 32007	1	35.0	62.0			
	OS42-62-7	Seal 42-62-7	1	42.0	62.0			
	M4X40SP	Split Pin 4X40	1	-	-			
BKIT10 Alt Code: 1248007	B32006	Bearing 32006	1	30.0	55.0	Ø 55mm	Trailco: 50mm Square Unbraked 9" Braked Axle Long Nose	R 310
	B32008	Bearing 32008	1	40.0	68.0			
	OS45-72-10	Seal 45-72-10	1	45.0	72.0-			
	M4X40SP	Split Pin 4X40	1	-	-			

Prices are exclusive of VAT and subject to change without prior notice. (E & OE Notice - pg43)

Bearing Kits

Kit	Components	Description	Qty	ID (mm)	OD (mm)	Grease Cap (i)	Application	Price Each
BKIT11 Alt Code: 1248010	B44649\10	Bearing 44649/10	1	26.9	50.2	Ø 50mm	Venter 45SQ	R 310
	B48548\10	Bearing 48548/10	1	34.9	65.0			
	OS50-65-8	Seal 50-65-8	1	50.0	65.0			
	M4X40SP	Split Pin 4X40	1	-	-			



Prices are exclusive of VAT and subject to change without prior notice. (E & OE Notice - pg43)

Couplers

Braked

Image	Stock Code	Capacity	Head	Body Type	Price
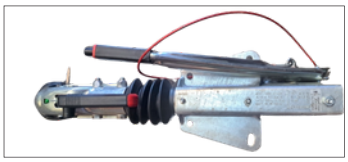	**CBALK90SB** Kober Coupler **Alt Code: COUPLER90S**	700kg-1000kg	50mm Ball	Delta	R 3,875
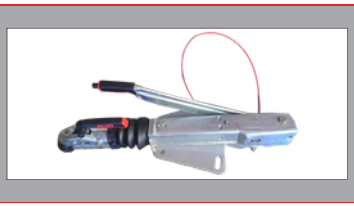	**CBALK161SB** Kober Coupler **Alt Code: COUPLER161S**	950kg-1600kg	50mm Ball	Delta	R 3,995
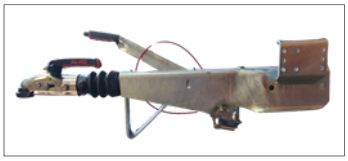	**CBALK161SBM1** Kober Mono Coupler **Alt Code: 247685**	950kg-1600kg	50mm Ball	Mono - 70mm	R 5,250
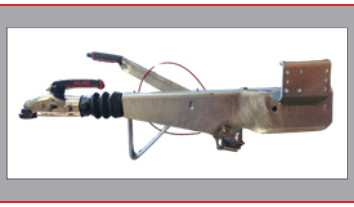	**CBALK161SBM** Kober Mono Coupler **Alt Code: COUPLER161S/SQ100**	950kg-1600kg	50mm Ball	Mono - 100mm	R 5,695
	**CBALK2300B.OT** Sigma - Old Type H/B **Alt Code: ORC/AK270/OTH/STD**	2300kg	50mm Ball	Delta	R 4,280
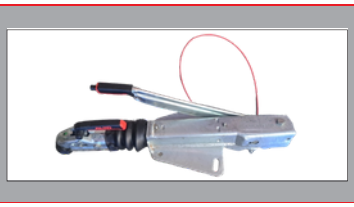	**CBALK251SB** Kober Coupler **Alt Code: COUPLER251S**	1500kg-2700kg	50mm Ball	Delta	R 4,480
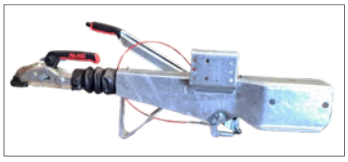	**CBALK251SBM** Kober MonoCoupler **Alt Code: COUPLER251S/SQ**	1500kg-2600kg	50mm Ball	Mono - 100mm	R 6,250

Couplers

Braked

Image	Stock Code	Capacity	Head	Body Type	Price
	**CBALK251GB1** Kober Coupler **Alt Code: COUPLER251G/AK301**	1550kg-3000kg	50mm Ball	Delta	R 5,080
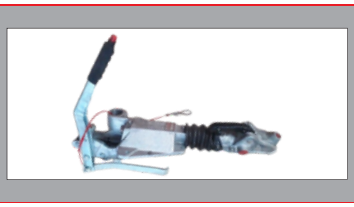	**CBALK3000B.OT** Sigma H/D - OldTypeH/B **Alt Code: ORC/AK301/OTH/HD**	3000kg	50mm Ball	Delta	R 4,980
	**CBALKPRO35B** Kober Coupler **Alt Code: COUPLERPROFI**	2000kg-3500kg	50mm Ball	Delta	R 8,895

Prices are exclusive of VAT and subject to change without prior notice. (E & OE Notice - pg43)

Sigma Spares

Cast Body

No.	Stock Code	Description	Price Each
1	**CBALKBALL50.B** Alt Code: COUPLERHEAD/AK270	Coupler Head AK300/AK270	R 850
1	**CBALKBALL50.B1** Alt Code: 1350059	Coupler Head Ak301 (1221746)	R 1,350
2	**CBALKS01.01** Alt Code: 1350020	Bellow Sigma New Ak300	R 75
2	**CBALKS01.07** Alt Code: BELLOWMONO	Bellow Mono	R 75
2	**CBALKS01.08** Alt Code: BELLOWBETA	Bellow Sigma Old Type	R 75
3	**JTCA009** Alt Code: LPS25	Locking Pad Sigma	R 15.50
4	**JTCA008B** Alt Code: 1348150	M12 Locking Handle Sigma	R 60
5	**CHDALK2300S.ALK** Alt Code: SIGMA/LDSHOCK	Shock Absorber 353936 Sigma L/D	R 1,020
5	**CHDALK3000S.ALK** Alt Code: SIGMA/HDSHOCK	Shock Absorber 1215917 Sigma H/D	R 1,065
6.1	**CBALKS03.01OT** Alt Code: HANDBRAKEASSYOLDTYPE	Handbrake Lever Assembly Old Type	R 875
6.2	**CBALKS03.02**	Handbrake Sigma Gaslift With Cable 1251692	R 880
7	**CBB-CB10230** Alt Code: 1248174	Autoreverse Spring Cylinder	R 375
8	**CBALKS06.01A**	Buffer Rubber 35mm	R 9.50
9	**CBALKS05.01**	Sigma Stepped Shaft	R680

NOTES:

Refer to image on the next page.

Prices are exclusive of VAT and subject to change without prior notice. (E & OE Notice - pg43)

Cast Bodies

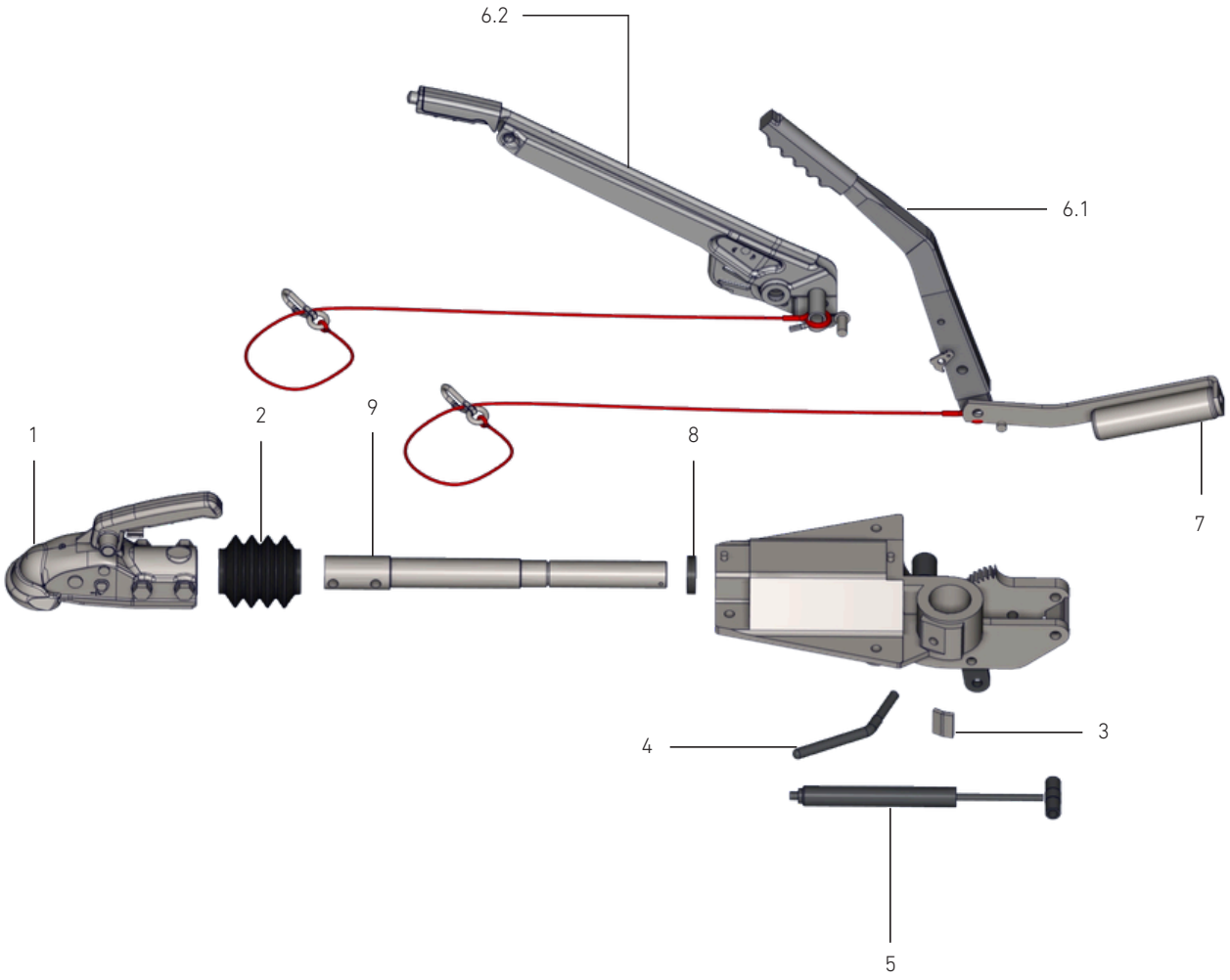

Prices are exclusive of VAT and subject to change without prior notice. (E & OE Notice - pg43)

Kober Spares

Pressed Steel Bodies

No.	Stock Code	Description	Price Each
1	**CBALKBALL50.B** AltCode:COUPLERHEAD/AK270	Coupler Head AK300/AK270	R 850
1	**CBALKBALL50.B1**	Coupler Head Ak301 (1221746)	R 1,350
1	**CBALKBALL60**	Coupler Head Ak351	R 2,600
2	**CBALKS01.03**	Bellow 90S	R 160
2	**CBALKS17** Alt Code: 1348687	Bellow 161/251S/251G 366356	R 160
2	**CBALKS02**	Bellow 3.5T 21726605	R 660
3	**CHDALK90S.ALK**	Shock Absorber 90S	R 1,055
3	**CHDALK161S.ALK**	Shock Absorber 161S 370556	R 1,155
3	**CHDALK251S.ALK**	Shock Absorber 251S 370589	R 1,255
3	**CHDALK251G.ALK**	Shock Absorber 251G 372641	R 1,530
3	**CHDALKPRO35.ALK**	Shock Profi3500 Coupler Cast Version	R 3,860
4.1	**CBALKS03.03**	Handbrake Assembly 90S/3 Kober	R 2,950.
4.1	**CBALKS03.05**	Handbrake 161/251S/251G	R 1,045
4.2	**CBALKS10**	Handbrake Assembly Profi 3000/3500	POR
5	**CBALK07.03**	Bushes Kit 90S	R 160.
5	**CBALK07.09**	Tube Bush Kit 2 Piece 161S/251S/251G	R 680
6	**CBALKS08.05G**	Shaft 251G 3 Ton Coupler	R 1,930
6	**CBALKS12**	Shaft for Profi 3500 Kober	R 3,600
7	**CBALKS23.05S**	Overrun Lever 251S 380526 90:30	R 280
7	**CBALKS23.05G** Alt Code: 1350312	Overrun Lever 251G 626796 90:27	R 280
8	**CBALKS34.02** Alt Code: 692648	Spring Cylinder Pack Profi Coupler 3500kg	POR

NOTES:

Refer to image on the next page.

Pressed Steel Bodies

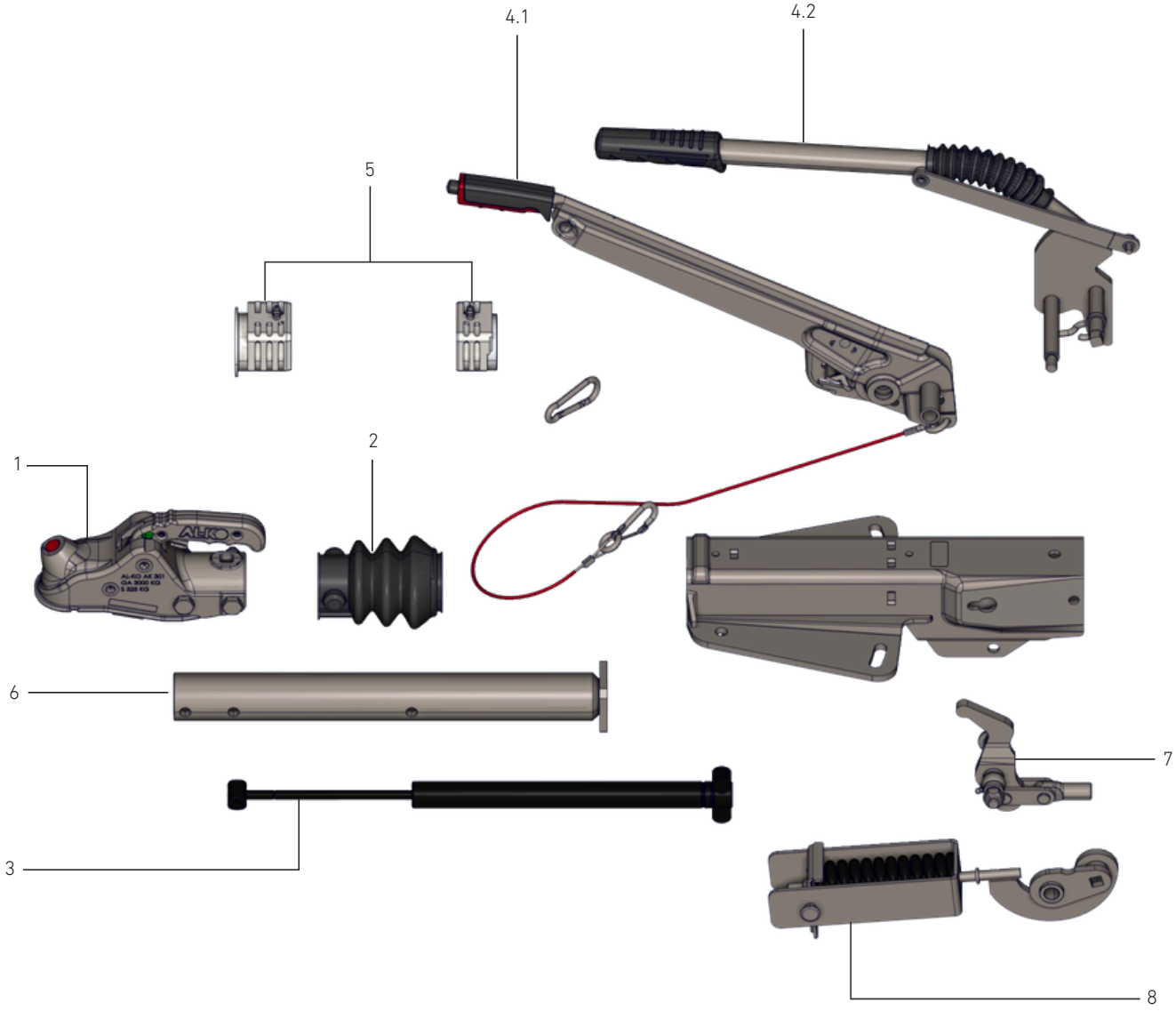

Prices are exclusive of VAT and subject to change without prior notice. (E & OE Notice - pg43)

Un-Braked Coupler

Image	Stock Code	Capacity	Head	Body Type	Price
	**CUALK0750** Alt Code:1248056	750kg	50mm Ball	Straight	R 310

Tow Balls, Pin Couplers & Accessories

Image	Stock Code	Description	Price
	**NTL014**	Pin & Ball Combination 1800kg	R 1,675
	**CGN50MM**	Gooseneck Ball Galv. 50mm 1.8T	R 475
	**CGN50MM2**	Towball & Nut	R 290
	**CGN50SB-BLACK** Alt Code: 1310913	Soft-Ball Black Single	R 55
	**CBALKL01**	Lock AK161/AK270 Kit	R 410
	**CBALKL02**	Coupler Safety Universal Lock (1224081)	R 1,240
	**CBALKL04**	Lock & Key Ak7 203216	R 165

Prices are exclusive of VAT and subject to change without prior notice. (E & OE Notice - pg43)

Jockey Wheels

Stock Code	Description	Max Load	Stroke	Shaft Ø	Wheel	Price Each
JT48/8S-RATCHET	Ratchet Jockey Wheel	350kg	330mm	48mm	200mm	R 3,710
JT48/8S-SCALE AltCode:JW PREM	Jockey Wheel 48 Premium	180kg	200mm	48mm	230mm	R 1,805
JT60/220S-0775R	Jockey Wheel Automatic	500kg	245mm	60mm	200mm	R 1,720
JT73/260S-0775R	Jockey Wheel Automatic	800kg	-	73mm	260x65	R 2,500
JTC48 Alt Code: 1335092	Clamp 48 Swivel	-	-	-	-	R 980



JT48/8S-RATCHET



JT48/8S -SCALE



JT60/220S -0775R



JT73/260S-0775R



JTC48

NOTES:

Refer to image on the next page.

Prices are exclusive of VAT and subject to change without prior notice. (E & OE Notice - pg43)

Landing Gear

Stock Code	Description	Outer Tube	Retracted Length	Extended Length	Stroke	Price Each
JT48/P AltCode: LIFTINGLEG/48	Parking Jack Ø48 with Plate	Ø48mm				R 610
JT60/P Alt Code: LIFTINGLEG/60	Lifting Leg 60	Ø60mm			260mm	R 820
J0020S Alt Code: LIFTINGMECHSHRT	Lifting Mech Short	□ 45mm			200mm	R 705
J0020 Alt Code: LIFTINGMECHLONG	Lifting Mech Long	□ 45mm			250mm	R 975
JCCJ02 Alt Code: CORNERSTEADY505	Corner Steady Galv. 505mm/190mm - 800kg		90mm	505mm	415mm	R 820
JCCJ03 Alt Code:CORNERSTEADY605	Corner Steady Galv. 605-267265 - 1,000kg		90mm	605mm	515mm	R 680.
JCCJ04 AltCode:1221694	Corner Steady Galv. Premium Long - 1,250kg		90mm	605mm	515mm	R 1,220
JCCJ05 Alt Code: 1731376	Corner Steady Electrical System UP4-ESS1 - 1,250kg		90mm	605mm	515mm	R 28,000
J0044ALKS Alt Code: 410/LIFTINGLEG	Stabiliser Leg 410/590mm 654859	□ 45mm	410mm	590mm	180mm	R 820
J0044ALK Alt Code: 510/LIFTINGLEG	Stabiliser Leg 510/740mm 654874	□ 45mm	510mm	740mm	230mm	R 880

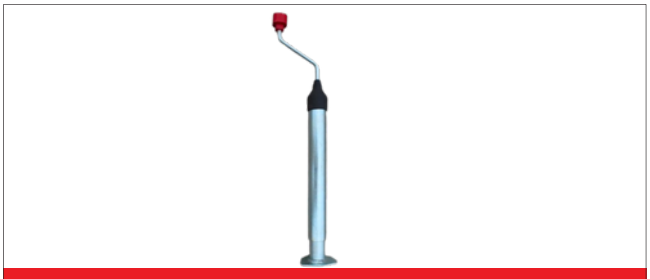

JT48/P & JT60/P



J0020

NOTES:

Refer to image on the next page.

Prices are exclusive of VAT and subject to change without prior notice. (E & OE Notice - pg43)



JCCJ02



JCCJ03



JCCJ04



JCCJ05



NOTE: For stabilising only. Not for lifting.

J0044

Landing Gear Spares

Stock Code	Description	Price Each
JTKNOB AltCode:JWKNOB	Jockey Wheel Knob	R 30
JTC25.01 AltCode:CASTKNOB/BOLT	Castor Knob with Bolt	R 25
J0020-FA001 AltCode:FOOTPIECE/SHORT/MECH	Foot piece Short Galv Lift Mech 45SQ	R 120
J0020-FA002 Alt Code: FOOTPIECE/LONG/MECH	Foot piece Long Galv Lift Mech 45SQ	R 130
JCALKP01 Alt Code: 655901	Jack Pad Single for J0044ALKS/ALK	R 145
JCALKP02 AltCode:JACKPAD	Jack Pad for Corner Steady - JCCJ02 (M6.3x100 Splitpin Sold Separately)	R 35
JCALKP01.KIT01 AltCode:1212458	Big Foot Set (4) For JCCJ04/05	R 1,060
JCALKP01-KIT02 AltCode:1213899	Adaptor Big Foot 4 in Box For JCCJ04 & JCCJ05	R 790
JCCJ01-SP001-G Alt Code: 1361861	Slide Plate 690mm For JCCJ04/05 Corner Steady	R 160
J0044H-ALK Alt Code: 654880	Handle + 2 Buttons for J0044ALKS/ALK	R 25
JCCH01 Alt Code: 1349911	Brace 595mm Manufacture Corner Steady	R 140
JCCH02 Alt Code: 267363	Brace 865mm F. Corner Steady	R 140



JTKNOB

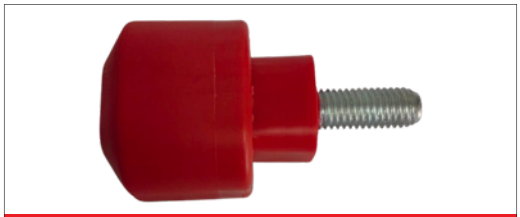

JTC25.01

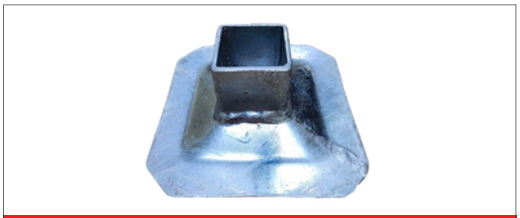

J0020-FA



JCALKP01

NOTES:

Refer to image on the next page.

Prices are exclusive of VAT and subject to change without prior notice. (E & OE Notice - pg43)



JCALKP02



JCALKP01.KIT01



JCCJ01-SP001-G



JCALKP01-KIT02



JCCH01



J0044H-ALK



JCCH02

Prices are exclusive of VAT and subject to change without prior notice. (E & OE Notice - pg43)

Chassis

Stock Code	Description	Size	Price Each
QPD00SCGR57152300 Alt Code: 1706017	1500kg Single Chassis	5715 x 2300mm	POR
QPD00SCGR66552300	1500kg Single Chassis	6655 x 2300mm	POR
QPD00TCGR76632300	1800kg Tandem Chassis	7663 x 2300mm	POR



QPD00SCGR57152300



QPD00TCGR76632300

Chassis Components

Stock Code	Description	Price Each
CHDALK244086.ALK	Shock Absorber Octagon Red (244086)	R 1,200
CHDALK244085.ALK	Shock Absorber Octagon Blue (244085)	R 880
ZAC-WC-01	Wheel Chock Black UK10K	R 80
ZAC-WCB-01	Wheel Chock Bracket Black UK10K	R 30
ZAC-WC-02 Alt Code: 1235990	Wheel Chock Black UK36K	R 240
ATC-ALK-S1300	ATC Single 750-1300kg GVM	POR
ATC-ALK-S1500	ATC Single 1301-1500kg GVM 1223023	POR
ATC-ALK-S1800	ATC Single 1501-1800kg GVM 1223287	POR
ATC-ALK-T2000	ATC Tandem 1601-2000kg GVM	POR
ATC-ALK-T2500	ATC Tandem 2001-2500kg GVM 1223288	POR
CBAKS50 Alt Code: 1350090	AKS3004 1225158	R 3,800
ZAC-SWC-01	Spare Wheel Carrier - 1265 to 1515	R 5,200
ZAC-SWC-02	Spare Wheel Carrier - 1465 to 1815	R 5,600
ZAC-SWC-03	Spare Wheel Carrier - Add On Kit	R 1,100

NOTES:
Refer to images on the next page.



CHDALK244086.ALK



CHDALK244085.ALK



WHEEL CHOCKS



ATC SYSTEM



CBAKS50



SPARE WHEEL CARRIER

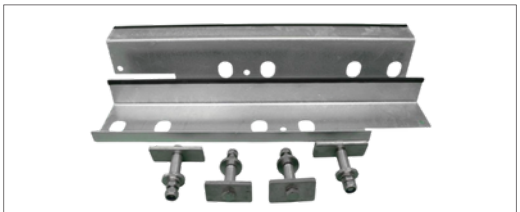

SPARE WHEEL CARRIER ADD ON KIT

Prices are exclusive of VAT and subject to change without prior notice. (E & OE Notice - pg43)

E&OE NOTICE

While we strive to provide accurate product and pricing information, unintentional pricing or typographical errors may occur. We reserve the right to correct any errors, inaccuracies or omissions and to change or update informa-tion (including, without limitation, images, information related to text, pricing, availability and product descriptions) at any time without notice.
Prices are subject to change without prior notice.

Johannesburg: 011 396 6000
Pretoria: 012 030 1800
Cape Town: 021 907 1900
Durban: 031 792 1020
Vereeniging: 016 100 6150
information@burquip.co.za

Burquip
Red-Line
www.burquip .co.za