Burquip

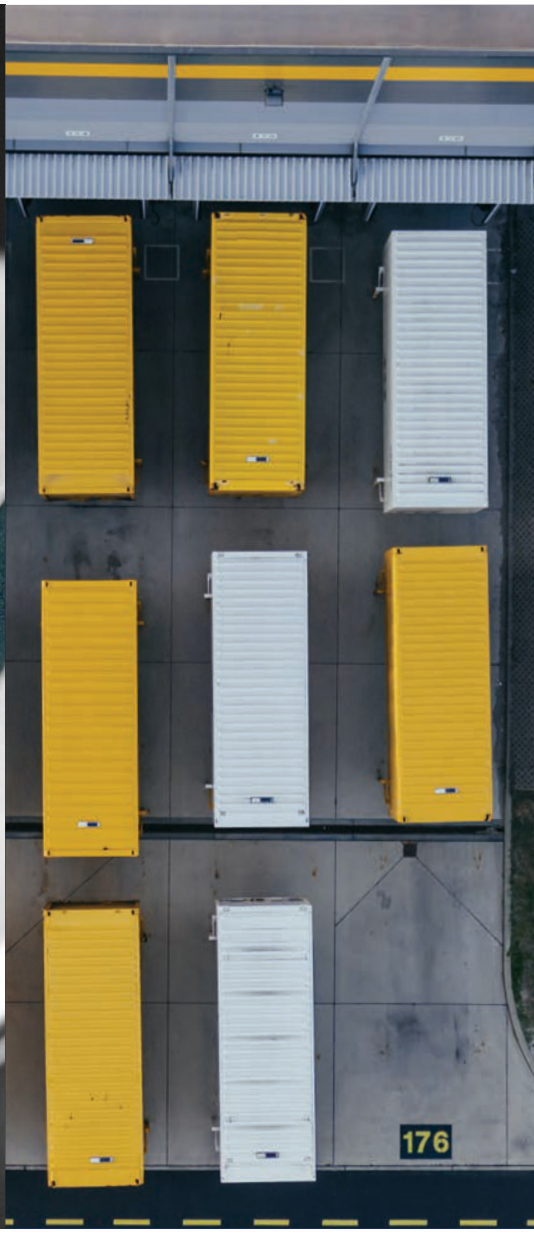


www.burquip.co.za

# Contents


## Rubbaride Axles - Up to 3500kg 05

Rubbaride Stub Axles without brakes 05
Rubbaride Full Beam Axles without brakes 06
Rubbaride Stub Axles with drum brakes 07
Rubbaride Full Beam Axles with drum brakes 08

## Standard High Speed Axles - Up to 3500kg 09

Standard High Speed Axles without brakes 09
Standard High Speed Axles with brakes 11

## Agricultural Implement Axles 12

Full Beam Axles without brakes 12
Full Beam Axles with brakes (Flat Cam) 13

## Standard High Speed Axles - 3500kg to 13000kg 14

## Transmission Components 15

## Bearing Kits 17

## Wheels 20

High Speed Trailer & Caravan Wheels 20
Rim & Tyre Combos 25
Agricultural Tractor & Implement Wheels 27

## Hydraulic Cylinders 30

Base Pin Mounted Cylinders 30
Center Trunnion Mounted Cylinders 33
Brake Cylinder Kit 37
Ball & Socket Tipping Joint 38

## Tie-Rod Cylinders 39

## Turntables 41

## Power Take-Off Series 43

Complete PTO's - 4S 43
Complete PTO's - 6S 43
PTO Spares - 4S 44
PTO Spares - 6S 45

## Couplers 46

With Brakes 46
Without Brakes 47
Tow Eyes 48

## Landing Gear 49
Jockey Wheels & Clamps 49
Parking Jacks 51
Stabiliser Legs 53

## Suspensions 54
Leaf Springs 54
Spring Kits 56
Spring Mounting Kits 57
Mechanical Spring Kits: 3500kg-36000kg 59
Parabolic Springs 60

## U-bolts & 5 Hole Plates 61
U-bolts 61
5 Hole Plates 62

## Saddles, Bolts & Hangers 63
Saddles 63
Bolts 63
Hangers 64

## Wheel Studs & Nuts 65
Wheel Studs 65
Wheel Nuts 66
Nylock Nuts 66

## Castle Nuts & Grease Caps 67
Caste Nuts 67
Grease Caps 68

## Knott Braked Coupler Spares 69
Pressed Steel Bodies 69
Cast Iron Bodies 71

## Coupler Din Eye Heads 72

## Brake Mechanisms 73
BK200 73
BK250B 74
BK250A 75

## Introduction to Pitch Circle Diameters (PCD) 76

## Brake Drums 77
1600kg Axle 77
1800kg Axle 78
2500kg Axle 79

## Hubs 80

750kg Unbraked Axle 80
1600kg Unbraked Axle 82
2500kg Unbraked Axle 84

## Electrical & Reflective Components 86

Electrical Cable 86
Light Boxes 86
Lights 87
Plugs & Adaptors 91
Reflective Components 92

## Body Components 93

Data Plate 93
Hand Winches 93
Tie-Downs 94
Hinges, Brackets & Fittings 95
Tail Boards 98
Mud Guards 99

## Contact Details 100

# *Rubbaride Stub Axles*

## *Without Brakes*

| Stock Code | Capacity | Stud Fixing | Price Per Stub |
|---|---|---|---|
| **AR0550/0750L / AR0550/0750R** | 550kg to 750kg (Pair) | 4/61/100 | R 2,195.00 |
| **AR0900/1150L / AR0900/1150R** | 900kg to 1150kg (Pair) | Optional | R 4,380.00 |
| **AR1200/1600L / AR1200/1600R** | 1200kg to 1600kg (Pair) | Optional | R 4,510.00 |
| **AR1300/1800L / AR1300/1800R** | 1300kg to 1800kg (Pair) | Optional | R 4,510.00 |
| **AR2000/2500L / AR2000/2500R** | 2000kg to 2500kg (Pair) | Optional | R 8,390.00 |
| **AR3000/3500L / AR3000/3500R** | 3000kg to 3500kg (Pair) | 6/160.8/205 | R 9,995.00 |

**ARR0550/0750L&R**

**AR3000/3500L&R**

When two axles are to be used in tandem, the order must state it.
Where two axles are used in tandem without a load sharing mechanism, the carrying capacity of the combination is reduced by 17%.

# *Rubbaride Full Beam Axles*

## *Without Brakes*

| Stock Code | Capacity | Stud Fixing | Price Each |
|---|---|---|---|
| **AR0550/0750-1** | 550kg to 750kg | 4/61/100 | R 4,195.00 |
| **AR0900/1150-1** | 900kg to 1150kg | Optional | R 7,995.00 |
| **AR1200/1600-1** | 1200kg to 1600kg | Optional | R 8,995.00 |
| **AR1300/1800-1** | 1300kg to 1800kg | Optional | R 8,895.00 |
| **AR2000/2500-1** | 2000kg to 2500kg | Optional | R 16,595.00 |
| **AR3000/3500-1** | 3000kg to 3500kg | 6/160.8/205 | R 18,295.00 |

**AR1200/1600-1**

**AR2000/2500-1**

When two axles are to be used in tandem, the order must state it.
Where two axles are used in tandem without a load sharing mechanism, the carrying capacity of the combination is reduced by 17%.

# Rubbaride Stub Axles
## *With Drum Brakes*

| Stock Code | Capacity | Stud Fixing | Brake Size | Brake Capacity | Price Per Stub |
|---|---|---|---|---|---|
| **ARC0900/1150L / ARC0900/1150R** | 900kg to 1150kg (Pair) | Optional | 200X50 | 1600kg | R 5,760.00 |
| **ARC1200/1600L / ARC1200/1600R** | 1200kg to 1600kg (Pair) | Optional | 200X50 | 1600kg | R 5,995.00 |
| **ARC1300/1800L / ARC1300/1800R** | 1300kg to 1800kg (Pair) | Optional | 250X40 | 1800kg | R 6,995.00 |
| **ARC2000/2500L / ARC2000/2500R** | 2000kg to 2500kg (Pair) | Optional | 250X50 | 2500kg | R 11,295.00 |
| **ARC3000/3500L / ARC3000/3500R** | 3000kg to 3500kg (Pair) | Optional | 250X50 | 2500kg | R16,995.00 |

**ARC1200-1600L&R**

When two axles are to be used in tandem, the order must state it.
Where two axles are used in tandem without a load sharing mechanism, the carrying capacity of the combination is reduced by 17%.
Price exludes brake cable.

# Rubbaride Full Beam Axles

## *With Drum Brakes*

| Stock Code | Capacity | Stud Fixing | Brake Size | Brake Capacity | Price Each |
|---|---|---|---|---|---|
| **ARC0900/1150-1** | 900kg to 1150kg | Optional | 200X50 | 1600kg | R 11,295.00 |
| **ARC1200/1600-1** | 1200kg to 1600kg | Optional | 200X50 | 1600kg | R 11,995.00 |
| **ARC1300/1800-1** | 1300kg to 1800kg | Optional | 250X40 | 1800kg | R 13,595.00 |
| **ARC2000/2500-1** | 2000kg to 2500kg | Optional | 250X50 | 2500kg | R 21,995.00 |
| **ARC3000/3500-1** | 3000kg to 3500kg | 6/160/205 | 305X80 | 3500kg | R 32,995.00 |

**ARC0900/1150-1**

**ARC1300/1800-1**

When two axles are to be used in tandem, the order must state it.
Where two axles are used in tandem without a load sharing mechanism, the carrying capacity of the combination is reduced by 17%.
Price excludes brake cable.

# *Full Beam Axles*

## *Without Brakes*

| Stock Code | Load Capacity | Hub | Beam | H/H | Price Each |
|---|---|---|---|---|---|
| **AF40A.H/H.01** | 900kg | 4/61/100 | Ø 40mm | Up to 1250mm | R 1,755.00 |
| **AF40A.H/H.01** | 900kg | 4/61/100 | Ø 40mm | 1251mm to 1450mm | R 1,795.00 |
| **AF40A.H/H.01** | 900kg | 4/61/100 | Ø 40mm | 1480mm to 1650mm | R 1,925.00 |
| **AF40A.H/H.01** | 900kg | 4/61/100 | Ø 40mm | 1675mm to 1805mm | R 1,975.00 |
| **AF40A.H/H.01** | 900kg | 4/61/100 | Ø 40mm | 1850mm to 2000mm | R 2,095.00 |
| **AF40A.H/H.01** | 900kg | 4/61/100 | Ø 40mm | 2001mm to 2100mm | R 2,195.00 |
| **AF40A.H/H.01** | 900kg | 4/61/100 | Ø 40mm | 2101mm to 2150mm | R 2,195.00 |
| **AF40A.H/H.01** | 900kg | 4/61/100 | Ø 40mm | 2151mm to 2200mm | R 2,315.00 |
| **AF40A.H/H.01** | 900kg | 4/61/100 | Ø 40mm | 2201mm to 2300mm | R 2,375.00 |
| **AF45A.H/H** | 1600kg | Optional | ☐ 45mm | Up to 1420mm | R 2,825.00 |
| **AF45A.H/H** | 1600kg | Optional | ☐ 45mm | 1421mm to 1450mm | R 2,925.00 |
| **AF45A.H/H** | 1600kg | Optional | ☐ 45mm | 1451mm to 1575mm | R 2,995.00 |
| **AF45A.H/H** | 1600kg | Optional | ☐ 45mm | 1576mm to 1805mm | R 3,075.00 |
| **AF45A.H/H** | 1600kg | Optional | ☐ 45mm | 1805mm to 1850mm | R 3,095.00 |
| **AF45A.H/H** | 1600kg | Optional | ☐ 45mm | 1851mm to 1940mm | R 3,125.00 |
| **AF45A.H/H** | 1600kg | Optional | ☐ 45mm | 1941mm to 2040mm | R 3,195.00 |
| **AF45A.H/H** | 1600kg | Optional | ☐ 45mm | 2041mm to 2100mm | R 3,325.00 |
| **AF45A.H/H** | 1600kg | Optional | ☐ 45mm | 2101mm to 2200mm | R 3,395.00 |
| **AF45A.H/H** | 1600kg | Optional | ☐ 45mm | 2201mm to 2250mm | R 3,425.00 |
| **AF45A.H/H** | 1600kg | Optional | ☐ 45mm | 2251mm to 2350mm | R 3,595.00 |

**AF40A**

**AF45A**

When two axles are to be used in tandem, the order must state it.
Where two axles are used in tandem without a load sharing mechanism, the carrying capacity of the combination is reduced by 17%.

# *Full Beam Axles*

## *Without Brakes*

| Stock Code | Load Capacity | Hub | Beam | H/H | Price Each |
|---|---|---|---|---|---|
| **AF50A.H/H** | 2500kg | Optional | ☐ 50mm | Up to 1740mm | R 3,795.00 |
| **AF50A.H/H** | 2500kg | Optional | ☐ 50mm | 1801mm to 1950mm | R 3,975.00 |
| **AF50A.H/H** | 2500kg | Optional | ☐ 50mm | 1951mm to 2050mm | R 4,175.00 |
| **AF50A.H/H** | 2500kg | Optional | ☐ 50mm | 2051mm to 2140mm | R 4,275.00 |
| **AF50A.H/H** | 2500kg | Optional | ☐ 50mm | 2141mm to 2400mm | R 4,425.00 |
| **AF55A.H/H** | 3000kg | Optional | ☐ 55mm | Up to 1675mm | R 4,295.00 |
| **AF55A.H/H** | 3000kg | Optional | ☐ 55mm | 1676mm to 2300mm | R 4,295.00 |
| **AF60A.H/H.05** | 4000kg | 6/160/205 | ☐ 60mm | Up to 1700mm | R 6,395.00 |
| **AF60A.H/H.05** | 4000kg | 6/160/205 | ☐ 60mm | 1701mm to 2100mm | R 6,825.00 |
| **AF70A.H/H.05** | 6000kg | 6/160.8/205 | ☐ 70mm | Up to 1650mm | R 6,995.00 |
| **AF70A.H/H.05** | 6000kg | 6/160.8/205 | ☐ 70mm | 1651mm to 1675mm | R 6,995.00 |
| **AF70A.H/H.05** | 6000kg | 6/160.8/205 | ☐ 70mm | 1676mm to 1800mm | R 7,575.00 |
| **AF70A.H/H.05** | 6000kg | 6/160.8/205 | ☐ 70mm | 1801mm to 1950mm | R 7,575.00 |
| **AF70A.H/H.05** | 6000kg | 6/160.8/205 | ☐ 70mm | 1951mm to 2200mm | R 7,575.00 |

**AF55A**

**AF70A**

When two axles are to be used in tandem, the order must state it.
Where two axles are used in tandem without a load sharing mechanism, the carrying capacity of the combination is reduced by 17%.

# *Full Beam Axles*

## *With Brakes*

| Stock Code | Load Capacity | Hub | Beam | Brake | Brake Capacity | H/H | Price Each |
|---|---|---|---|---|---|---|---|
| **AFC45A.H/H** | 1600kg | Optional | ☐ 45mm | 200x50 | 1600kg | Up to 1500mm | R 5,895.00 |
| **AFC45A.H/H** | 1600kg | Optional | ☐ 45mm | 200x50 | 1600kg | 1501mm to 1675mm | R 5,995.00 |
| **AFC45A.H/H** | 1600kg | Optional | ☐ 45mm | 200x50 | 1600kg | 1676mm to 1965mm | R 6,295.00 |
| **AFC45A.H/H** | 1600kg | Optional | ☐ 45mm | 200x50 | 1600kg | 1966mm to 2200mm | R 6,395.00 |
| **AFC45A.H/H** | 1600kg | Optional | ☐ 45mm | 200x50 | 1600kg | 2201mm to 2360mm | R 6,495.00 |
| **AFC50B.H/H** | 1800kg | Optional | ☐ 50mm | 250x40 | 1800kg | Up to 1600mm | R 8,895.00 |
| **AFC50B.H/H** | 1800kg | Optional | ☐ 50mm | 250x40 | 1800kg | 1601mm to 1940mm | R 9,195.00 |
| **AFC50B.H/H** | 1800kg | Optional | ☐ 50mm | 250x40 | 1800kg | 1941mm to 2100mm | R 9,395.00 |
| **AFC50B.H/H** | 1800kg | Optional | ☐ 50mm | 250x40 | 1800kg | 2101mm to 2320mm | R 9,595.00 |
| **AFC50A.H/H** | 2500kg | Optional | ☐ 50mm | 250x50 | 2500kg | Up to 1940mm | R 9,395.00 |
| **AFC50A.H/H** | 2500kg | Optional | ☐ 50mm | 250x50 | 2500kg | 1941mm to 2000mm | R 9,995.00 |
| **AFC50A.H/H** | 2500kg | Optional | ☐ 50mm | 250x50 | 2500kg | 2001mm to 2350mm | R 9,995.00 |
| **AFC55A.H/H** | 3000kg | Optional | ☐ 55mm | 250x50 | 2500kg | Up to 2300mm | R 10,495.00 |
| **AFC60A.H/H** | 3500kg | 6/160/205 | ☐ 60mm | 305x80 | 3500kg | Up to 2100mm | R 20,995.00 |

**AFC45A**

**AFC55A**

When two axles are to be used in tandem, the order must state it.
Where two axles are used in tandem without a load sharing mechanism, the carrying capacity of the combination is reduced by 17%.

# Full Beam Axles

## Without Brakes

| Stock Code | Load Capacity | Hub | Beam | H/H | Price Each |
|---|---|---|---|---|---|
| **AF55A.H/H** | 3000kg | Optional | ☐ 55mm | Up to 1675mm | R 4,295.00 |
| **AF55A.H/H** | 3000kg | Optional | ☐ 55mm | 1676mm to 2300mm | R 4,295.00 |
| **AF60A.H/H.05** | 4000kg | 6/160/205 | ☐ 60mm | Up to 1700mm | R 6,395.00 |
| **AF60A.H/H.05** | 4000kg | 6/160/205 | ☐ 60mm | 1701mm to 2100mm | R 6,825.00 |
| **AF70A.H/H.05** | 6000kg | 6/160.8/205 | ☐ 70mm | Up to 1650mm | R 6,995.00 |
| **AF70A.H/H.05** | 6000kg | 6/160.8/205 | ☐ 70mm | 1651mm to 1675mm | R 6,995.00 |
| **AF70A.H/H.05** | 6000kg | 6/160.8/205 | ☐ 70mm | 1676mm to 1800mm | R 7,575.00 |
| **AF70A.H/H.05** | 6000kg | 6/160.8/205 | ☐ 70mm | 1801mm to 1950mm | R 7,575.00 |
| **AF70A.H/H.05** | 6000kg | 6/160.8/205 | ☐ 70mm | 1951mm to 2200mm | R 7,575.00 |
| **AF80C** | 8000kg | 8/220/275 | ☐ 80mm | 1800mm | R 11,595.00 |
| **AF80C** | 8000kg | 8/220/275 | ☐ 80mm | 2150mm | R12,495.00 |
| **AF90C** | 10000kg | 10/275/335 | ☐ 90mm | 1800mm | R 17,495.00 |
| **AF100C.H/H** | 14000kg | 10/275/335 | ☐ 100mm | Up to 1850mm | R 21,390.00 |
| **AF100C.H/H** | 14000kg | 10/275/335 | ☐ 100mm | 1851mm to 2050mm | R 22,595.00 |
| **AF100C.H/H** | 14000kg | 10/275/335 | ☐ 100mm | 2051mm to 2200mm | R 22,695.00 |
| **AF100C.H/H** | 14000kg | 10/275/335 | ☐ 100mm | 2201mm to 2250mm | R 22,895.00 |
| **AF100C.H/H** | 14000kg | 10/275/335 | ☐ 100mm | 2251mm to 2300mm | R 22,995.00 |
| **AF100C.H/H** | 14000kg | 10/275/335 | ☐ 100mm | 2301mm to 2700mm | R 25,595.00 |
| **AF100C.H/H** | 14000kg | 10/275/335 | ☐ 100mm | 2701mm to 3300mm | R 25,595.00 |
| **AF127C.H/H** | 17000kg | 10/275/335 | Ø 127mm | Up to 2050mm | R 22,995.00 |
| **AF127C.H/H** | 17000kg | 10/275/335 | Ø 127mm | 2051mm to 2200mm | R 23,295.00 |
| **AF127C.H/H** | 17000kg | 10/275/335 | Ø 127mm | 2201mm to 2300mm | R 23,595.00 |
| **AF150C.H/H** | 17000kg | 10/275/335 | ☐ 150mm | Up to 2300mm | R 35,495.00 |
| **AF150C.H/H** | 17000kg | 10/275/335 | ☐ 150mm | 2301mm to 3000mm | R 41,295.00 |

Prices are exclusive of VAT and subject to change without prior notice. (E & OE Notice - pg100)

# Full Beam Axles
## With Brakes-Burquip (Flat Cam)

| Stock Code | Load Capacity | Hub | Beam | H/H | Brake Size | Price Each |
|---|---|---|---|---|---|---|
| **AFB70C.1800.AM** | 6000kg | 6/160.8/205 | ☐ 70mm | 1800mm | 300X60 | R12,760.00 |
| **AFB80C.1800.06.AM** | 8000kg | 8/220/275 | ☐ 80mm | 1800mm | 300x90 | R17,890.00 |
| **AFB80C.2150.06.AM** | 8000kg | 8/220/275 | ☐ 80mm | 2150mm | 300x90 | R 18,890.00 |
| **AFB90C.1800.10.AM** | 10000kg | 10/275/335 | ☐ 90mm | 1800mm | 400x80 | R25,010.00 |
| **AFB90C.1900.10.AM** | 10000kg | 10/275/335 | ☐ 90mm | 1900mm | 400x80 | R25,010.00 |
| **AFB100C.2050.10AM** | 14000kg | 10/275/335 | ☐ 100mm | 2050mm | 400x80 | R25,010.00 |
| **AFB100C.2200.10AM** | 14000kg | 10/275/335 | ☐ 100mm | 2200mm | 400x80 | R26,010.00 |

# Full Beam Axles
## With Brakes-ADR (Flat Cam)

| Stock Code | Load Capacity | Hub | Beam | H/H | Brake Size | Price Each |
|---|---|---|---|---|---|---|
| **AFB70C.1700.ADR** | 6000kg | 6/160.8/205 | ☐ 70mm | 1700mm | 300X60 | R 13,995.00 |
| **AFB70C.1800.ADR** | 6000kg | 6/160.8/205 | ☐ 70mm | 1800mm | 300X60 | R 14,595.00 |
| **AFB80C.1800.06.ADR** | 8000kg | 8/220/275 | ☐ 80mm | 1800mm | 300x90 | R 20,995.00 |
| **AFB80C.2150.06.ADR** | 8000kg | 8/220/275 | ☐ 80mm | 2150mm | 300x90 | R 20,995.00 |
| **AFB90C.1800.10.ADR** | 10000kg | 10/275/335 | ☐ 90mm | 1800mm | 400x80 | R27,595.00 |
| **AFB100C.2050.10** | 14000kg | 10/275/335 | ☐ 100mm | 2050mm | 400x80 | R33,495.00 |
| **AFB100C.2200.10** | 14000kg | 10/275/335 | ☐ 100mm | 2200mm | 400x80 | R32,595.00 |

**AFB70C.1700.ADR**

**AFB100C.2050.10**

Price excludes brake cable.

Prices are exclusive of VAT and subject to change without prior notice. (E & OE Notice - pg100)

# *Full Beam Axles*

## *With Brakes (S-CAM)*

| Stock Code | Load Capacity | Hub | Beam | H/H | Brake Size | Price Each |
|---|---|---|---|---|---|---|
| **AFB70AS6**<br>Includes Manual Slack Adjusters | 3500kg | 6/160.8/205<br>Stud Mount | ☐ 70mm | 1820mm<br>Special:<br>On Request | 310X80 | R 20,995.00 |
| **AFB70AS6A**<br>Includes Automatic Slack Adjusters | 3500kg | 6/160.8/205 | ☐ 70mm | 1820mm<br>Special:<br>On Request | 310X80 | R20,010.00 |
| **AFB70AS6ABS**<br>Includes ABS, Automatic Slack Adjusters | 3500kg | 6/160.8/205<br>Stud Mount | ☐ 70mm | 1820mm<br>Special:<br>On Request | 310X80 | R 25,995.00 |
| **AFB80CS8ABS**<br>Includes ABS, Automatic Slack Adjusters | 5000kg | 8/220/275<br>Stud Mount | ☐ 80mm | 1820mm | 300X135 | R 27,495.00 |
| **AFB80CS8ABS.2150**<br>Includes ABS, Automatic Slack Adjusters | 5000kg | 8/220/275<br>Stud Mount | ☐ 80mm | 2150mm | 300X135 | R 27,995.00 |
| **AFB127CS10.1920**<br>Includes Automatic Slack Adjusters | 13000kg | 10/280/335<br>Spigot Mount* | Ø127mm | 1920mm | 420X180 | R 36,995.00 |
| **AFB127CS10ABS.1920**<br>Includes ABS, Automatic Slack Adjusters | 13000kg | 10/280/335<br>Spigot Mount* | Ø127mm | 1896mm | 420X180 | R 37,995.00 |

## *Optional extras*

| Stock Code | Description | Price Each |
|---|---|---|
| **M22WS.122** | Longer studs for aluminium rim fitment (20 required per axle) | R77.00 |

**AFB127CS10ABS.1920**

Prices are exclusive of VAT and subject to change without prior notice. (E & OE Notice - pg100)

# Transmission Components

| Image | Stock Code | Description | Price |
|---|---|---|---|
| | **BC01** | Equaliser bracket tandem | R 210.00 |
| | **BC02** | Equaliser bracket single | R 85.00 |
| 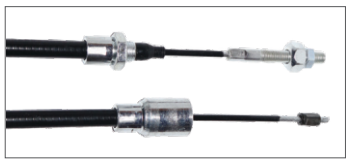 | **BCK1140**<br>**BCK1440**<br>**BCK1740** | Bell Inside Diameter: 18.5mm<br>Brake cable 1140mm steel<br>Brake cable 1440mm steel<br>Brake cable 1740mm steel | <br>R 215.00<br>R 215.00<br>R 215.00 |
| | **BCK1140S**<br>**BCK1440S**<br>**BCK1740S** | Bell Inside Diameter: 18.5mm<br>Brake cable 1140mm stainless steel<br>Brake cable 1440mm stainless steel<br>Brake cable 1740mm stainless steel | <br>R 330.00<br>R 330.00<br>R 330.00 |
| 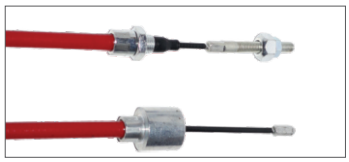 | **BCALK1120**<br>**BCALK1350**<br>**BCALK1650** | ALKO Spare Part \| Bell ID: 23.5mm<br>Brake cable 1120mm steel<br>Brake cable 1350mm steel<br>Brake cable 1650mm steel | <br>R 215.00<br>R 215.00<br>R 215.00 |
| | **BCK1168**<br>**BCK1468**<br>**BCK1745** | 160/200/250gsm \| Bell ID: 20.0mm<br>Brake cable 1168mm steel<br>Brake cable 1468mm steel<br>Brake cable 1745mm steel | <br>R 310.00<br>R 310.00<br>R 330.00 |
| | **M10RB** | M10 threaded rod<br>(3 meter lengths only) | R115.00 |

Prices are exclusive of VAT and subject to change without prior notice. (E & OE Notice - pg100)

| | | | |
|---|---|---|---|
| | **M10X36DN** | Dome nut | R29.00 |
| | **CHBL01** | Hand brake lever | R 875.00 |

# Bearing Kits

| Kit | Components | Description | Qty | ID (mm) | OD (mm) | Grease Cap (i) | Application | Price Each |
|---|---|---|---|---|---|---|---|---|
| BKIT01 | B30204 | Bearing 30204 | 1 | 20.0 | 47.0 | Ø 47mm | Burquip:<br>AF40A<br>AF38A | R 165.00 |
| | B30205 | Bearing 30205 | 1 | 25.0 | 52.0 | | | |
| | OS30-52-7 | Seal 30-52-7 | 1 | 30.0 | 52.0 | | | |
| | M3.2X36SP | Split Pin 3.2X36 | 1 | - | - | | | |
| BKIT02 | B30205 | Bearing 30205 | 1 | 25.0 | 52.0 | Ø 52mm | Burquip:<br>AF/AFC45A Pre-2010<br>AF/AFC40A-1<br>AF/AFC38A-1 | R 215.00 |
| | B30206 | Bearing 30206 | 1 | 30.0 | 62.0 | | | |
| | OS38-62-7 | Seal 38-62-7 | 1 | 38.0 | 62.0 | | | |
| | M3.2X36SP | Split Pin 3.2X36 | 1 | - | - | | | |
| BKIT03 | B30206 | Bearing 30206 | 1 | 30.0 | 62.0 | Ø 62mm | Burquip:<br>AF/AFC50A<br>AF/AFC55A<br>AFC50E | R 295.00 |
| | B30208 | Bearing 30208 | 1 | 40.0 | 80.0 | | | |
| | OS48-80-10 | Seal 48-80-10 | 1 | 48.0 | 80.0 | | | |
| | M4X40SP | Split Pin 4X40 | 1 | - | - | | | |
| BKIT04 | B30205 | Bearing 30205 | 1 | 25.0 | 52.0 | Ø 52mm | Burquip:<br>AF/AFC45A<br>Post-2010<br>AF50C<br>AFC50B | R 245.00 |
| | B32007 | Bearing 32007 | 1 | 35.0 | 62.0 | | | |
| | OS42-62-7 | Seal 42-62-7 | 1 | 42.0 | 62.0 | | | |
| | M3.2X36SP | Split Pin 3.2X36 | 1 | - | - | | | |
| BKIT05 | B44649\10 | Bearing 44610/49 | 1 | 27.0 | 50.0 | Ø 50mm | Venter:<br>40mm Unbraked<br>Axle 4/100<br><br>Rubax:<br>Rheno Hub | R 250.00 |
| | B67048\10 | Bearing 67048/10 | 1 | 31.7 | 59.1 | | | |
| | OS40-60-10 | Seal 40-60-10 | 1 | 40.0 | 60.0 | | | |
| | M4X40SP | Split Pin 4X40 | 1 | - | - | | | |
| BKIT06 | B44649\10 | Bearing 44610/49 | 2 | 27.0 | 50.0 | Ø 50mm | Venter:<br>40mm Square<br>Unbraked<br>4/100 Mini Hub | R 180.00 |
| | OS38-52-7 | Bearing 38-52-7 | 1 | 38.0 | 52.0 | | | |
| | M4X40SP | Spit Pin 4x40 | 1 | - | - | | | |

Prices are exclusive of VAT and subject to change without prior notice. (E & OE Notice - pg100)

| Kit | Components | Description | Qty | ID (mm) | OD (mm) | Grease Cap (i) | Application | Price Each |
|---|---|---|---|---|---|---|---|---|
| BKIT07 | B11749\10 | Bearing 11749/10 | 1 | 17.0 | 40.0 | Ø 48mm | Trailco: 40mm Braked Axle 40mm Unbraked Axle | R 185.00 |
| | B45449\10 | Bearing 45449/10 | 1 | 29.0 | 50.3 | | | |
| | OS38-52-7 | Seal 38-52-7 | 1 | 38.0 | 52.0 | | | |
| | M3.2X36SP | Split Pin 3.2X36 | 1 | - | - | | | |
| BKIT08 | B11949\10 | Bearing 11949/10 | 1 | 19.0 | 45.2 | Ø 48mm | Trailco: 45mm Braked/ Unbraked Axle 5/114.3 or 4/100 | R 195.00 |
| | B67048\10 | Bearing 67048/10 | 1 | 31.7 | 59.1 | | | |
| | OS42-62-7 | Seal 42-62-7 | 1 | 42.0 | 62.0 | | | |
| | M3.2X36SP | Split Pin 3.2X36 | 1 | - | - | | | |
| BKIT09 | B32005 | Bearing 32005 | 1 | 25.0 | 47.0 | Ø 48mm | Trailco: 45mm Braked 6/139.7 50mm Round Unbraked 9 Braked Axle Short Nose | R 225.00 |
| | B32007 | Bearing 32007 | 1 | 35.0 | 62.0 | | | |
| | OS42-62-7 | Seal 42-62-7 | 1 | 42.0 | 62.0 | | | |
| | M4X40SP | Split Pin 4X40 | 1 | - | - | | | |
| BKIT10 | B32006 | Bearing 32006 | 1 | 30.0 | 55.0 | Ø 55mm | Trailco: 50mm Square Unbraked 9 Braked Axle Long Nose | R 295.00 |
| | B32008 | Bearing 32008 | 1 | 40.0 | 68.0 | | | |
| | OS45-72-10 | Seal 45-72-10 | 1 | 45.0 | 72.0 | | | |
| | M3.2X36SP | Split Pin 3.2X36 | 1 | - | - | | | |

BKIT08

| Kit | Components | Description | Qty | ID (mm) | OD (mm) | Grease Cap (i) | Application | Price Each |
|---|---|---|---|---|---|---|---|---|
| BKIT11 | B44649\10 | Bearing 44649/10 | 1 | 26.9 | 50.2 | Ø 50mm | Venter 45SQ | R 295.00 |
| | B48548\10 | Bearing 48548/10 | 1 | 34.9 | 65.0 | | | |
| | OS50-65-8 | Seal 50-65-8 | 1 | 50.0 | 65.0 | | | |
| | M4X40SP | Split Pin 4X40 | 1 | - | - | | | |
| BKIT12 | B30208 | Bearing 30208 | 1 | 40.0 | 80.0 | Ø 80mm | AF60A | R 385.00 |
| | B30211 | Bearing 30211 | 1 | 55.0 | 100.0 | | | |
| | OS70-100-13 | Seal 70-100-13 | 1 | 70.0 | 100.0 | | | |
| | M5X70SP | Split Pin 5X70 | 1 | - | - | | | |
| BKIT13 | B30209 | Bearing 30209 | 1 | 45.0 | 85.0 | Ø 85mm | AF70A | R 415.00 |
| | B30212 | Bearing 30212 | 1 | 60.0 | 110.0 | | | |
| | OS68-110-13 | Seal 68-110-13 | 1 | 68.0 | 110.0 | | | |
| | M5X70SP | Split Pin 5X70 | 1 | - | - | | | |

BKIT13

# High Speed Trailer & Caravan Wheels
## 10" Rims

| Stock Code | Type | Description | Stud Fixing | Off Set | Price |
|---|---|---|---|---|---|
| **W10-4.5B-01** | 4.5B x 10 | White spoked (SDC) | 4/67/100 | -5mm | R 585.00 |

**W10-4.5B-01**

# High Speed Trailer & Caravan Wheels
## 13" Rims

| Stock Code | Type | Description | Stud Fixing | Off Set | Price |
|---|---|---|---|---|---|
| **W13-4.5J-01I** | 4.5J x 13 | White spoked (SDC) | 4/67/100 | 0mm | R 495.00 |
| **W13-4.5J-02I** | 4.5J x 13 | White spoked (SDC) | 5/72.5/114.3 | 0mm | R 495.00 |
| **W13-4.5J-01G** | 4.5J x 13 | Galvanised spoked (SDC) | 4/67/100 | 0mm | R 725.00 |
| **W13-4.5J-01IS** | 4.5J x 13 | Silver spoked (SDC) | 4/67/100 | 0mm | R 495.00 |

**W13-4.5J-02I**

Prices are exclusive of VAT and subject to change without prior notice. (E & OE Notice - pg100)

# High Speed Trailer & Caravan Wheels
## 14" Rims

| Stock Code | Type | Description | Stud Fixing | Off Set | Price |
|---|---|---|---|---|---|
| **W14-6.0J-01I** | 6.0J x 14 | White spoked (SDC) | 4/67/100 | 14mm | R 675.00 |
| **W14-6.0J-02I** | 6.0J x 14 | White spoked (SDC) | 5/83.5/114.3 | 14mm | R 675.00 |
| **W14-6.0J-02G** | 6.0J x 14 | Galvanised spoked (SDC) | 5/83.5/114.3 | 14mm | R 925.00 |
| **W14-6.0J-02IS** | 6.0J x 14 | Silver spoked (SDC) | 5/83.5/114.3 | 14mm | R 675.00 |
| **W14-6.0J-04I** | 6.0J x 14 | White spoked (SDC) | 6/108.9/139.7 | 14mm | R 675.00 |
| **W14-6.0J-04G** | 6.0J x 14 | Galvanised spoked (SDC) | 6/108.9/139.7 | 14mm | R 925.00 |

W14-6.0J-01I

W14-6.0J-02I

# High Speed Trailer & Caravan Wheels
## 15" Rims

| Stock Code | Type | Description | Stud Fixing | Off Set | Price |
|---|---|---|---|---|---|
| **W15-7.0J-02I** | 7.0J x 15 | White spoked (SDC) | 5/83.5/114.3 | 3mm | R 925.00 |
| **W15-7.0J-04I** | 7.0J x 15 | White spoked (SDC) | 6/108.9/139.7 | 0mm | R 925.00 |
| **W15-7.0J-04G** | 7.0J x 15 | Galvanised spoked (SDC) | 6/108.9/139.7 | 0mm | R 1,295.00 |
| **W15-7.0J-04IB** | 7.0J x 15 | Black spoked (SDC) | 6/108.9/139.7 | 0mm | R 925.00 |
| **W15-7.0J-04IS** | 7.0J x 15 | Silver spoked (SDC) | 6/108.9/139.7 | 0mm | R 925.00 |

W15-7.0J-02I

Prices are exclusive of VAT and subject to change without prior notice. (E & OE Notice - pg100)

# High Speed Trailer & Caravan Wheels

## 16" Rims

| Stock Code | Type | Description | Stud Fixing | Off Set | Price |
|---|---|---|---|---|---|
| **W16-7.0J-04I** | 7.0J x 16 | White spoked (SDC) | 6/108.9/139.7 | 5mm | R 1,275.00 |
| **W16-7.0J-04IS** | 7.0J x 16 | Silver spoked (SDC) | 6/108.9/139.7 | 5mm | R 1,275.00 |
| **W16-5.5B-03** | 5.5B x 16 | Black solid (SDC) | 5/110/165.1 | 0mm | R 1,295.00 |
| **W16-6.0G-03C** | 6.0G x 16 | 2 piece (SDC) | 5/110/165.1 | 0mm | R 1,595.00 |
| **W16-6.0G-05DC** | 6.0G x 16 | 2 piece dual (SDC) | 6/161/205 | 130mm | R 1,595.00 |
| **W16-6.5H-05C** | 6.5H x 16 | 2 piece (SDC) | 6/161/205 | 0mm | R2,180.00 |
| **W16-7.0-05C** | 7.0 x 16 | 2 piece (Flatbase) | 6/161/205 | 0mm | R 2,275.00 |
| **W16-7.0-06C** | 7.0 x 16 | 2 piece (Flatbase) | 8/221/275 | 0mm | R 2,275.00 |

**W16-5.5B-03**

**W16-6.0G-05DC**

**W16-6.5H-05C**

**W16-7.0-06C**

# High Speed Trailer & Caravan Wheels
## 17.5" Rims

| Stock Code | Type | Description | Stud Fixing | Off Set | Price |
|---|---|---|---|---|---|
| **W17.5-6.75-05l** | 6.75 x 17.5 | SDC | 6/161/205 | 0mm | R2,850.00 |
| **W17.5-6.75HC-06l** | 6.75x 17.5 | Dual SDC | 8/221/275 | 143mm | R1,870.00 |

W17.5-6.75-05

# High Speed Trailer & Caravan Wheels
## 20" Rims

| Stock Code | Type | Description | Stud Fixing | Off Set | Price |
|---|---|---|---|---|---|
| **W20-7.5V-05C** | 7.5V x 20 | 2 piece (Flatbase) | 6/161/205 | 0mm | R2,540.00 |
| **W20-7.5V-06C** | 7.5V x 20 | 2 piece (Flatbase) | 8/221/275 | 0mm | R2,540.00 |

W20-7.5V-05C

W20-7.5V-06C

Prices are exclusive of VAT and subject to change without prior notice. (E & OE Notice - pg100)

# High Speed Trailer & Caravan Wheels

## 22.5" Rims

| Stock Code | Type | Description | Stud Fixing | Off Set | Price |
|---|---|---|---|---|---|
| **W22.5-9.00-10** | 9.00 x 22.5 | Spigot Mount Dual SDC | 10/281/335 | 175mm | R2,595.00 |
| **W22.5-9.00-10T** | 9.00 x 22.5 | Stud Mount Dual SDC | 10/281/335 | 175mm | R2,595.00 |
| **W22.5-11.75-10** | 11.75 x 22.5 | Super Single (SDC) | 10/281/335 | 0mm | R3,500.00 |

W22.5-9.00-10

W22.5-11.75-10

# Rim & Tyre Combos
## 13" Combos

| Stock Code | Tyre Size | Rim Description | Ply Rating | Load Rating | Overall Ø | Stud Fixing | Price |
|---|---|---|---|---|---|---|---|
| **WT13-155-01** | 155/80 x 13 | 4.5J x 13 White | 6 | 437kg | 578mm | 4/67/100 | R1,095.00 |
| **WT13-155-01G** | 155/80 x 13 | 4.5J x 13 Galvanised | 6 | 437kg | 578mm | 4/67/100 | R1,275.00 |
| **WT13-155-02** | 155/80 x 13 | 4.5J x 13 White | 6 | 437kg | 578mm | 5/72.5/114.3 | R1,095.00 |

**WT13-155-01**

**WT13-155-02**

# Rim & Tyre Combos
## 14" Combos

| Stock Code | Tyre Size | Rim Description | Ply Rating | Load Rating | Overall Ø | Stud Fixing | Price |
|---|---|---|---|---|---|---|---|
| **WT14-195-01** | 195R14C | 6.0J x 14 White | 8 | 900kg | 668mm | 4/67/100 | R1,895.00 |
| **WT14-195-02** | 195R14C | 6.0J x 14 White | 8 | 900kg | 668mm | 5/83.5/114.3 | R1,895.00 |
| **WT14-195-02G** | 195R14C | 6.0J x 14 Galvanised | 8 | 900kg | 668mm | 5/83.5/114.3 | R2,075.00 |
| **WT14-195-04** | 195R14C | 6.0J x 14 White | 8 | 900kg | 668mm | 6/108.9/139.7 | R1,895.00 |
| **WT14-195-04G** | 195R14C | 6.0J x 14 Galvanised | 8 | 900kg | 668mm | 6/108.9/139.7 | R2,075.00 |

**WT14-195-01**

# Rim & Tyre Combos
## 15" Combos

| Stock Code | Tyre Size | Rim Description | Ply Rating | Load Rating | Overall Ø | Stud Fixing | Price |
|---|---|---|---|---|---|---|---|
| **WT15-225-04G** | 225/70R15C | 7.0J x 15 Galvanised | 8 | 1120kg | 697mm | 6/108.9/139.7 | R2,575.00 |
| **WT15-225-04** | 225/70R15C | 7.0J x 15 White | 8 | 1120kg | 697mm | 6/108.9/139.7 | R2,295.00 |

**WT15-225-04**

# Rim & Tyre Combos
## 16" Combos

| Stock Code | Tyre Size | Rim Description | Ply Rating | Load Rating | Overall Ø | Stud Fixing | Price |
|---|---|---|---|---|---|---|---|
| **WT16-7.50-6.5H-05** | 7.50 x 16 | 6.5H x 16 Black 2 PC | 12 | 1400kg | 808mm | 6/161/205 | R3,370.00 |
| **WT16-7.50-6.0G-03** | 7.50 x 16 | 6.0G x 16 Black 2 PC | 12 | 1400kg | 808mm | 5/110/165.1 | R3,220.00 |

**WT16-7.50-6.5H-05**

Prices are exclusive of VAT and subject to change without prior notice. (E & OE Notice - pg100)

# Agricultural Tractor & Implement Wheels
## 14" Rims

| Stock Code | Type | Description | Stud Fixing | Off Set | Price |
|---|---|---|---|---|---|
| **W14-5.0J-03L** | 5.0J x 14 | SDC | 5/110/165.1 | 0mm | R1,110.00 |

**W14-5.0J-03L**

# Agricultural Tractor & Implement Wheels
## 15" Rims

| Stock Code | Type | Description | Stud Fixing | Off Set | Price |
|---|---|---|---|---|---|
| **W15-6.0J-03L** | 6.0J x 15 | SDC | 5/110/165.1 | 0mm | R 1,375.00 |
| **W15-8.0W-03L** | 8.0W x 15 | SDC | 5/110/165.1 | 0mm | R1,780.00 |
| **W15-8.0W-05L** | 8.0W x 15 | SDC | 6/161/205 | 0mm | R1,780.00 |

**W15-6.0J-03L**

**W15-8.0W-03L**

# Agricultural Tractor & Implement Wheels
## 15.5" Rims

| Stock Code | Type | Description | Stud Fixing | Off Set | Price |
|---|---|---|---|---|---|
| **W15.5-13.0-05L** | 13.0 x 15.5 | SDC | 6/161/205 | 0mm | R3,370.00 |

W15.5-13.0-05L

# Agricultural Tractor & Implement Wheels
## 16" Rims

| Stock Code | Type | Description | Stud Fixing | Off Set | Price |
|---|---|---|---|---|---|
| **W16-8.0W-05L** | 8.0W x 16 | SDC | 6/161/205 | 0mm | R 3,185.00 |

W16-8.0W-05L

# Agricultural Tractor & Implement Wheels

## 18" Rims

| Stock Code | Type | Description | Stud Fixing | Off Set | Price |
|---|---|---|---|---|---|
| **W18-9.0-05L** | 9.0 x 18 | SDC | 6/161/205 | 0mm | R2,295.00 |
| **W18-11.0-05L** | 11.0 x 18 | SDC | 6/161/205 | 0mm | R2,795.00 |
| **W18-11.0-06L** | 11.0 x 18 | SDC | 8/221/275 | 0mm | R2,995.00 |

**W18-11.0-05L**

**W18-11.0-06L**

# Hydraulic Cylinders

## Base Pin Mounted Cylinders (Tipping)

| Stock Code | Thrust (100 bar) | Stages | Closed Centers | Stroke | Pin Hole Ø | Barrel Ø | Price Each |
|---|---|---|---|---|---|---|---|
| **DW265** | 7.3 / 3.9 | 2 | 673mm | 969mm | 25.80mm | 105mm | R 6,475.00 |
| **DW345** | 7.3 / 3.9 | 2 | 876mm | 1375mm | 25.80mm | 105mm | R 6,795.00 |
| **DW365** | 7.3 / 4.6 / 3.1 | 3 | 924mm | 1993mm | 25.80mm | 105mm | R 9,995.00 |
| **DW385** | 9.3 / 6.3 | 2 | 914mm | 1403mm | 32.50mm | 120mm | R 8,895.00 |
| **DW265CL** | 6.4 / 3.9 | 2 | 673mm | 969mm | 25.80mm | 105mm | R 6,995.00 |
| **DW345CL** | 6.4 / 3.9 | 2 | 876mm | 1375mm | 25.80mm | 105mm | R 7,995.00 |
| **DW365CL** | 6.4 / 3.9 / 2 | 3 | 924mm | 1993mm | 25.80mm | 105mm | R 10,995.00 |
| **DW385CL** | 8 / 5.1 | 2 | 914mm | 1403mm | 32.50mm | 120mm | R 9,995.00 |
| **DW626C** | 9.3 / 6.3 | 2 (Chromed) | 775mm | 1075mm | 31.75mm | 120mm | R 13,195.00 |
| **DW1111C** | 13/9/5 | 3 (Chromed) | 1245mm | 2821mm | 31.75mm | 120mm | R 17,595.00 |

Tipping Gear

# Base Pin Mounted Cylinders (Tipping)

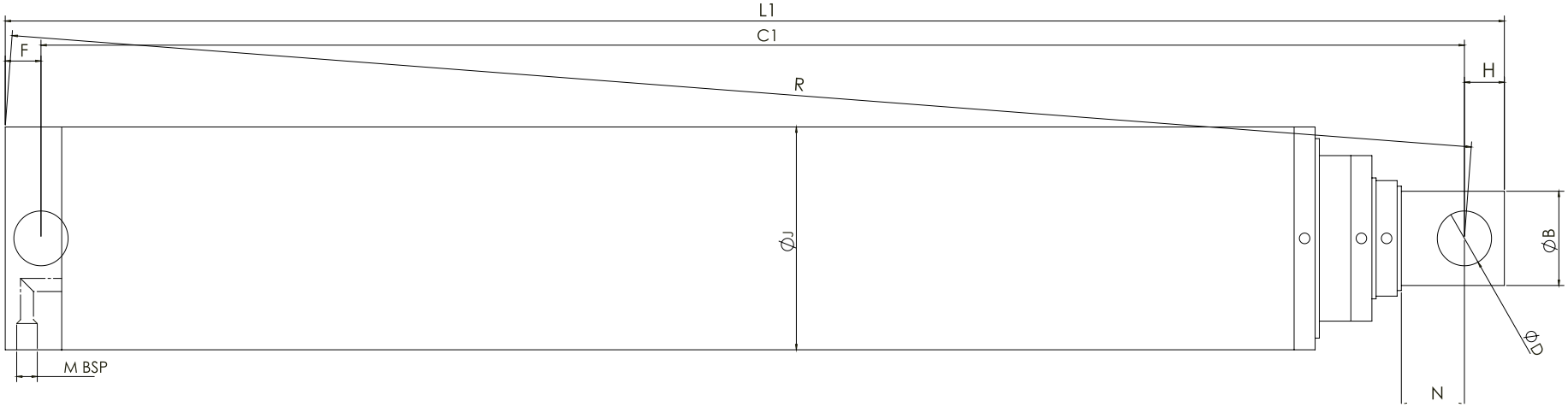


**Piston Diameters & Thrust at 100 bar**

| Stock Code | Stages | Ø60.30 3180kg | Ø69.85 3905kg | Ø76.20 4650kg | Ø88.90 6325kg | Ø95.25 7365kg | Ø107.95 9330kg | Mass | Oil Vol | Seal Kit Code | ØB (mm) | C1 (mm) | ØD (mm) | F (mm) | H (mm) | N (mm) | ØJ (mm) | L1 | M | R |
|---|---|---|---|---|---|---|---|---|---|---|---|---|---|---|---|---|---|---|---|---|
| **DW265** | 2 | | ● | | | ● | | 24.5kg | 4.5ℓ | DWSK265 | 44.45 | 673 | 25.8 | 20 | 19 | 45 | 105 | 712 | 1/2" | 695 |
| **DW345** | 2 | | ● | | | ● | | 31.0kg | 7.6ℓ | DWSK265 | 44.45 | 876 | 25.8 | 20 | 19 | 45 | 105 | 915 | 1/2" | 898 |
| **DW365** | 3 | ● | | ● | | ● | | 38.0kg | 9.8ℓ | DWSK365 | 44.45 | 924 | 25.8 | 20 | 19 | 72 | 105 | 963 | 1/2" | 946 |
| **DW626C** | 2 | | | | ● | | ● | 38.0kg | 8.4 | DWSK626 | 50.80 | 775 | 32.5 | 22 | 22 | 75 | 120 | 819 | 1/2" | 800 |
| **DW385** | 2 | | | | ● | | ● | 41.0kg | 10.9ℓ | DWSK626 | 50.80 | 914 | 32.5 | 22 | 22 | 50 | 120 | 958 | 1/2" | 938 |
| **DW1111C** | 3 | | ● | | ● | | ● | 43.2kg | 18.6ℓ | DWSK1111 | 50.0 | 1245 | 31.75 | 22 | 22 | 109 | 120 | 1289 | 1/2" | 1268 |

# Base Pin Mounted Cylinders (Tipping)

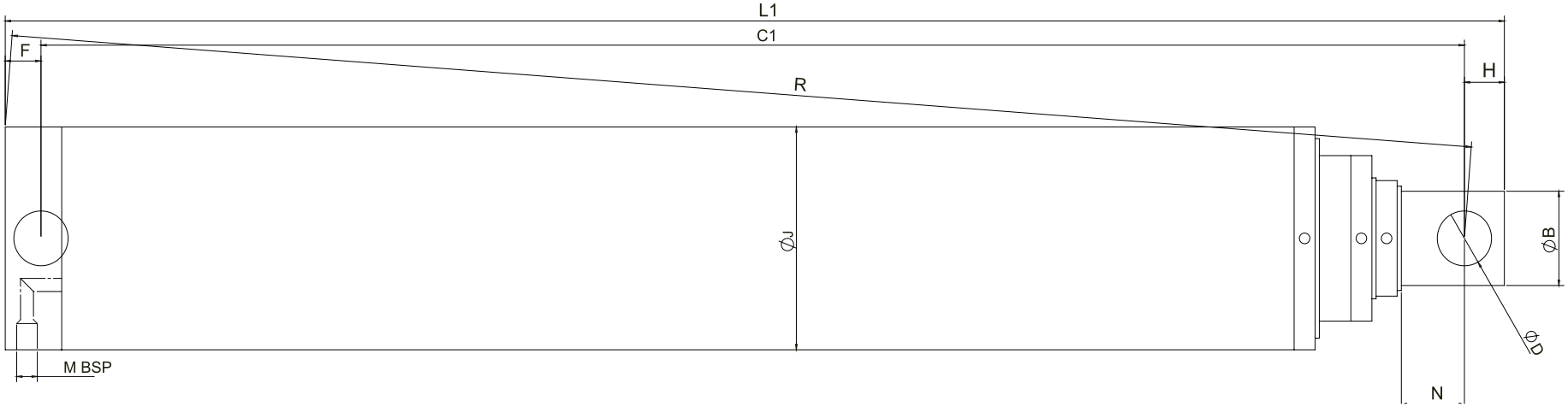


**Piston Diameters & Thrust at 100 bar**

| Stock Code | Stages | Ø50 2000kg | Ø70 3920kg | Ø80 5120kg | Ø90 8541kg | Ø100 8000kg | | Mass | Oil Vol | Seal Kit Code | ØB (mm) | C1 (mm) | ØD (mm) | F (mm) | H (mm) | N (mm) | ØJ (mm) | L1 | M | R |
|---|---|---|---|---|---|---|---|---|---|---|---|---|---|---|---|---|---|---|---|---|
| **DW265CL** | 2 | | ● | | ● | | | 25.8kg | 4.5ℓ | DWSK265CL | 44.45 | 673 | 25.8 | 20 | 19 | 45 | 105 | 712 | 1/2" | 695 |
| **DW345CL** | 2 | | ● | | ● | | | 32.8kg | 7.6ℓ | DWSK265CL | 44.45 | 876 | 25.8 | 20 | 19 | 45 | 105 | 915 | 1/2" | 898 |
| **DW365CL** | 3 | ● | ● | | ● | | | 40.8kg | 9.8ℓ | DWSK365CL | 44.45 | 924 | 25.8 | 20 | 19 | 72 | 105 | 963 | 1/2" | 946 |
| **DW385CL** | 2 | | | ● | | ● | | 44.1kg | 10.9ℓ | DWSK626CL | 50.80 | 914 | 32.5 | 22 | 22 | 50 | 120 | 958 | 1/2" | 938 |

## Center Trunnion Mounted Cylinders (Tipping)

| Stock Code | Thrust (100bar) | Stages | Stroke | Trunnions | Price Each |
|---|---|---|---|---|---|
| **DD3032G** | 6/4/2 | 3 | 700mm | DDT35 | R 8,495.00 |
| **DD3044G** | 8/6/4/2 | 4 | 1050mm | DDT40 | R 11,895.00 |
| **DD3047G** | 8/6/4/2 | 4 | 1510mm | DDT40 | R 12,795.00 |
| **DD3055G** | 12/8/6/4/2 | 5 | 2150mm | DDT45 | R 18,995.00 |
| **DD4050G** | 16/12/8/6/3 | 5 | 1900mm | DDT50 | R 24,995.00 |
| **DD4052G** | 21/16/12/8/6 | 5 | 2100mm | DDT50 | R 30,995.00 |

## Center Trunnion Mounted Cylinders - Chrome (Tipping)

| Stock Code | Thrust (100bar) | Stages | Stroke | Trunnions | Price Each |
|---|---|---|---|---|---|
| **DD3032LG** | 6/4/2 | 3 | 683mm | DDT35L | R 6,095.00 |
| **DD3044LG** | 8/6/4/2 | 4 | 1050mm | DDT40L | R 8,195.00 |
| **DD3047LG** | 8/6/4/2 | 4 | 1510mm | DDT40L | R 9,495.00 |
| **DD3055LG** | 12/8/6/4/2 | 5 | 2130mm | DDT45L | R 12,595.00 |
| **DD4050LG** | 16/12/8/6/3 | 5 | 1870mm | DDT50L | R 16,595.00 |

**NOTES:**
Maximum operating pressure: 180 bar (2600PSI).
Prices include two (2) trunnion brackets.
**Guarantee only valid if cylinder is used with a cradle.**

## Cradles for Center Trunnion Mounted Cylinders (Tipping)

| | SUPPORTED CYLINDERS | | | | | | | |
|---|---|---|---|---|---|---|---|---|
| **Stock Code** | **DD3032** | **DD3044** | **DD3047** | **DD3055** | **DD4050** | **DD4052** | **Trunnions** | **Price Each** |
| **DDC2** | ● | | | | | | DDT40 | R 2,395.00 |
| **DDC3** | | ● | ● | | | | DDT40 | R 2,495.00 |
| **DDC4** | | | | ● | | | DDT50 | R 3,195.00 |
| **DDC5** | | | | | ● | | DDT50 | R 7,595.00 |
| **DDC6** | | | | | | ● | DDT50 | R 8,795.00 |

# Center Trunnion Mounted Cylinders (Tipping) : Specifications

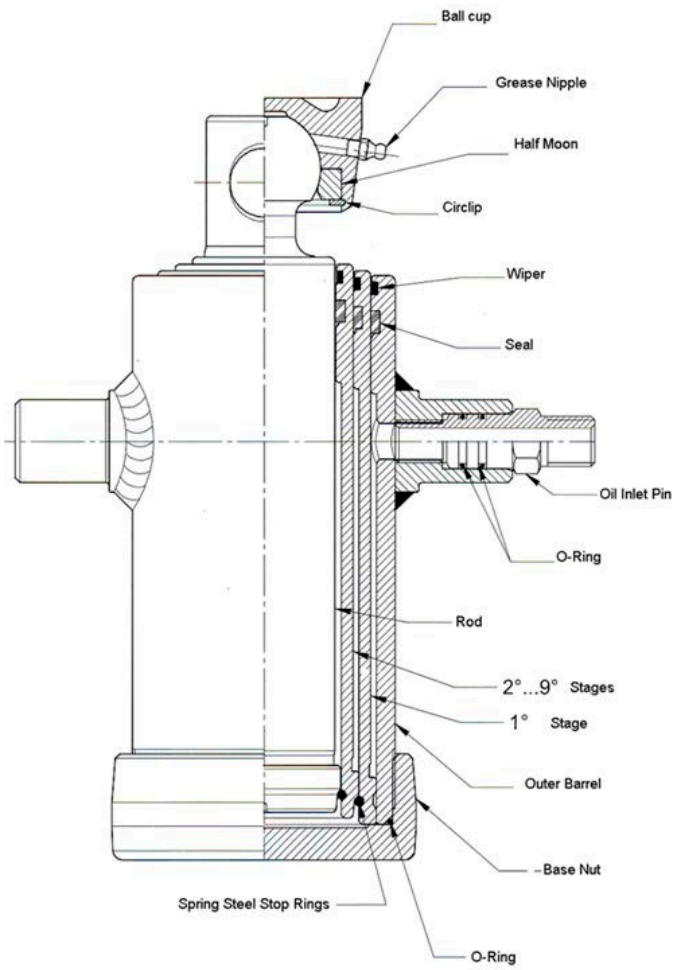


| Stock Code | Mass | Oil Vol. | Ball Joint Code | Hyd. Fitt. Code | Seal Kit Code | Cradle Code | Trunnion Code | Individual Stage Length |
|---|---|---|---|---|---|---|---|---|
| **DD3032** | 26.0kg | 3.3ℓ | DDBJ55 | DDHF1/2 | DDSK3032 | DDC2 | DDT35 | 300mm |
| **DD3044** | 33.5kg | 6.2ℓ | DDBJ55 | DDHF1/2 | DDSK3044/47 | DDC3 | DDT40 | 335mm |
| **DD3047** | 43.0kg | 8.8ℓ | DDBJ55 | DDHF1/2 | DDSK3044/47 | DDC3 | DDT40 | 450mm |
| **DD3055** | 67.0kg | 15.5ℓ | DDBJ55 | DDHF1/2 | DDSK3055 | DDC4 | DDT45 | 500mm |
| **DD4050** | 81.5kg | 18.2ℓ | DDBJ65 | DDHF3/4 | DDSK4050/51 | DDC5 | DDT50 | 450mm |
| **DD4052** | 94.5kg | 28.2ℓ | DDBJ65 | DDHF3/4 | DDSK4052 | DDC6 | DDT50 | 500mm |

# Center Trunnion Mounted Cylinders (Tipping)

| Stock Code | ØA (mm) | ØB (mm) | C1 (mm) | ØD (mm) | E (mm) | F (mm) | ØG (mm) | H (mm) | ØJ (mm) | ØK (mm) | L1 (mm) | M BSP GAS | R (mm) |
|---|---|---|---|---|---|---|---|---|---|---|---|---|---|
| DD3032 | 95 | 55 | 147 | 35 | 40 | 250 | 135 | 55 | 112 | 128 | 397 | 1/2" | 260 |
| DD3044 | 95 | 55 | 157 | 40 | 40 | 280 | 150 | 55 | 124 | 144 | 437 | 1/2" | 290 |
| DD3047 | 95 | 55 | 157 | 40 | 40 | 395 | 150 | 55 | 124 | 144 | 552 | 1/2" | 405 |
| DD3055 | 95 | 55 | 165 | 45 | 45 | 445 | 175 | 55 | 152 | 172 | 610 | 1/2" | 455 |
| DD4050 | 107 | 65 | 245 | 50 | 45 | 320 | 210 | 60 | 170 | 200 | 565 | 3/4" | 335 |
| DD4052 | 107 | 65 | 245 | 50 | 45 | 370 | 230 | 60 | 190 | 220 | 615 | 3/4" | 390 |

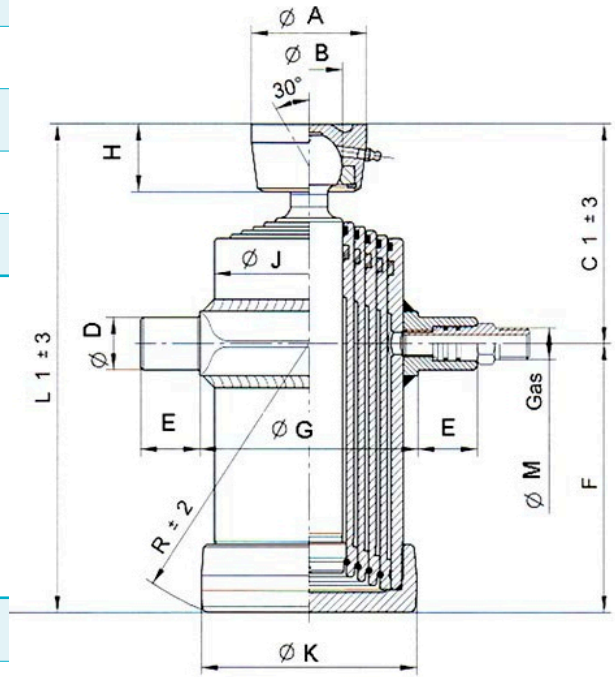


**Piston Diameters (mm) & Thrust at 180 bar**

| Stock Code | Stages | Stroke | Ø61 5200kg | Ø68 6500kg | Ø76 8100kg | Ø88 10900kg | Ø91 11700kg | Ø107 16100kg | Ø126 22400kg | Ø145 29700kg | Ø165 38400kg |
|---|---|---|---|---|---|---|---|---|---|---|---|
| DD3032 | 3 | 683mm | ● | | ● | | ● | | | | |
| DD3044 | 4 | 1050mm | ● | | ● | | ● | ● | | | |
| DD3047 | 4 | 1510mm | ● | | ● | | ● | ● | | | |
| DD3055 | 5 | 2130mm | ● | | ● | | ● | ● | ● | | |
| DD4050 | 5 | 1870mm | | ● | | ● | | ● | ● | ● | |
| DD4052 | 5 | 2100mm | | | | ● | | ● | ● | ● | ● |

# Cradles for Center Trunnion Mounted Cylinder (Tipping)

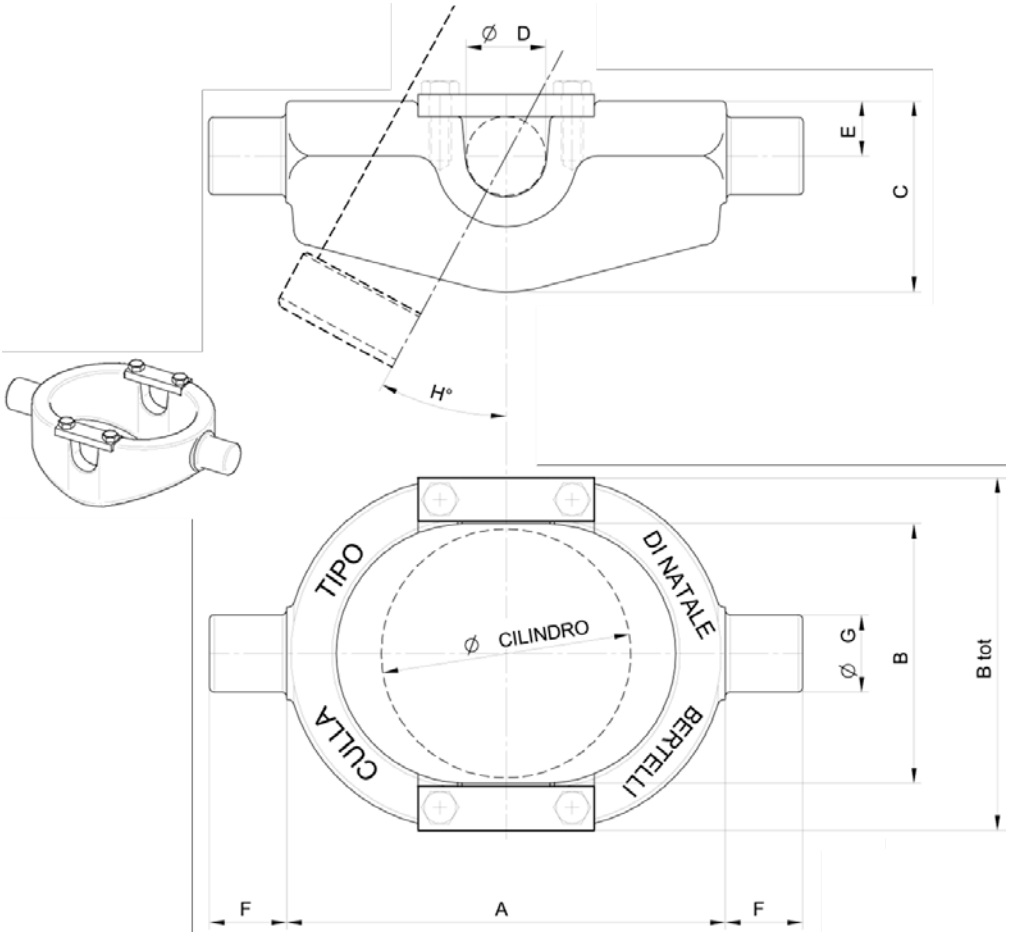


| Stock Code | A (mm) | B (mm) | B tot (mm) | C (mm) | ØD (mm) | E (mm) | F (mm) | ØG (mm) | H | ØCil. (mm) | Load | Mass |
|---|---|---|---|---|---|---|---|---|---|---|---|---|
| **DDC2** | 230 | 135 | 195 | 97 | 35 | 28 | 40 | 40 | 30° | 112 | 10T | 9.0kg |
| **DDC3** | 230 | 155 | 215 | 107 | 40 | 31 | 40 | 40 | 30° | 121 | 16T | 10.5kg |
| **DDC4** | 230 | 185 | 240 | 125 | 45 | 40 | 45 | 50 | 30° | 150 | 20T | 15.0kg |
| **DDC5** | 330 | 215 | 290 | 165 | 50 | 45 | 55 | 50 | 30° | 170 | 22T | 22.0kg |
| **DDC6** | 330 | 235 | 310 | 205 | 50 | 65 | 55 | 50 | 30° | 190 | 23T | 29.0kg |

# Hydraulic Cylinder Assembly

| Stock Code | Description | Price Each |
|---|---|---|
| DC366 | Hydraulic brake cylinder for axle braking - low speed | R1,470.00 |
| DC366C | Brake Ram Only - 30mm Rod | R940.00 |

**NOTES:**

The cylinder should be parallel ±5° to the base plate when connected to the brake lever of the axle in order to achieve the correct spring preload.

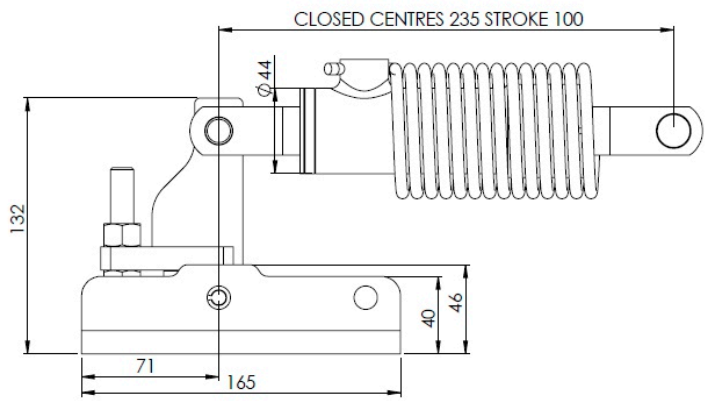


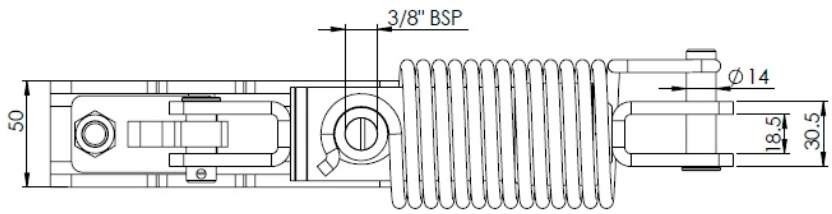

DC366

DC366C

# Ball & Socket Tipping Joint

| Stock Code | Max Load | ØA (mm) | ØB (mm) | ØC (mm) | D | E | Tipping Angle | Price Each |
|---|---|---|---|---|---|---|---|---|
| **DTBS01** | 5000kg | 77.5 | 104 | 66 | 69 | 45 | 55° (nominal) | R1,110.00 |

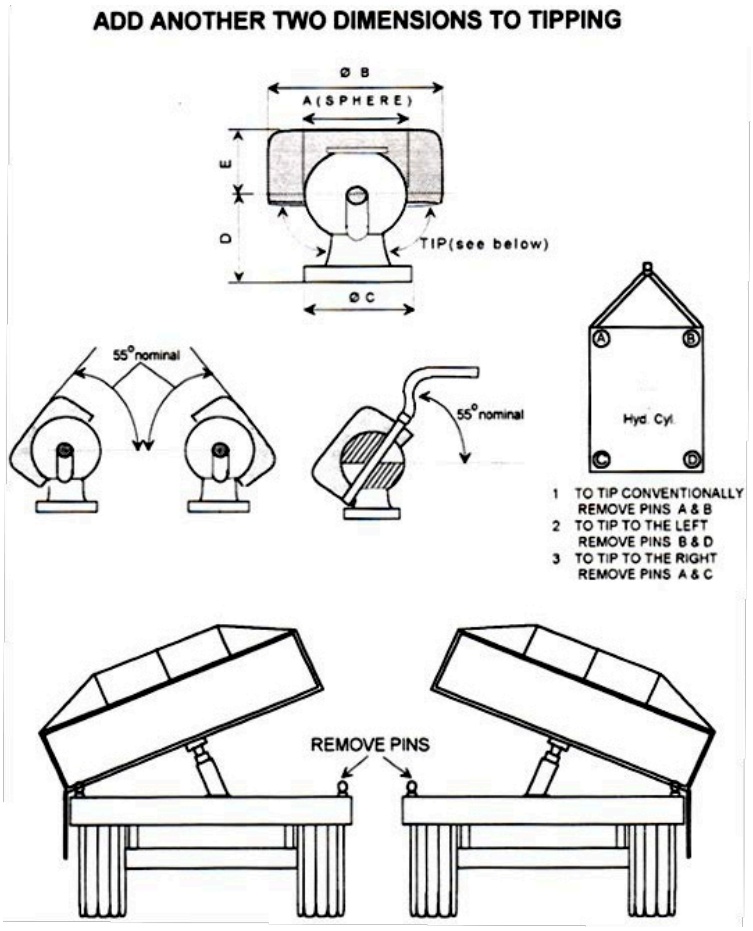

# Tie-Rod Cylinders

| Stock Code | Description | Price Each |
|---|---|---|
| DC2-2006TR | Tie-rod cylinder - 2006TR | R 1,535.00 |
| DC2-2008-ASAE-TR | Tie-rod cylinder - 2008-ASAE-TR | R 1,650.00 |
| DC2-2010TR | Tie-rod cylinder - 2010TR | R 1,650.00 |
| DC2-2018TR | Tie-rod cylinder - 2018TR | R 2,005.00 |
| DC2-3006TR | Tie-rod cylinder - 3006TR | R 1,895.00 |
| DC2-3008-ASAE-TR | Tie-rod cylinder - 3008-ASAE-TR | R2,130.00 |
| DC2-3010TR | Tie-rod cylinder - 3010TR | R 2,050.00 |
| DC2-3012TR | Tie-rod cylinder - 3012TR | R 2,075.00 |
| DC2-3014TR | Tie-rod cylinder - 3014TR | R 2,195.00 |
| DC2-3016TR | Tie-rod cylinder - 3016TR | R 2,225.00 |
| DC2-3018TR | Tie-rod cylinder - 3018TR | R 2,335.00 |
| DC2-3020TR | Tie-rod cylinder - 3020TR | R 2,495.00 |
| DC2-3024TR | Tie-rod cylinder - 3024TR | R 2,555.00 |
| DC2-3030TR | Tie-rod cylinder - 3030TR | R 3,335.00 |
| DC2-3036TR | Tie-rod cylinder - 3036TR | R 3,730.00 |
| DC2-4010TR | Tie-rod cylinder - 4010TR | R 3,395.00 |
| DC2-4012TR-2 | Tie-rod cylinder - 4012TR | R 3,595.00 |
| DC2-4018TR | Tie-rod cylinder - 4018TR | R 4,100.00 |
| DC2-4024TR | Tie-rod cylinder - 4024TR | R 4,715.00 |
| DC2-4030TR | Tie-rod cylinder - 4030TR | R 5,240.00 |
| DC2-4036TR | Tie-rod cylinder - 4036TR | R 5,765.00 |
| DC2-3010TR-1.5 | Tie-rod cylinder - 3010TR | R 2,240.00 |
| DC2-3012TR-1.5 | Tie-rod cylinder - 3012TR | R 2,385.00 |
| DC2-3018TR-1.5 | Tie-rod cylinder - 3018TR | R 2,765.00 |
| DC2-3024TR-1.5 | Tie-rod cylinder - 3024TR | R 3,050.00 |
| DC2-3028TR-1.5 | Tie-rod cylinder - 3028TR | R 3,265.00 |

# Specifications

| Stock Code | Rod Diameter | Bore (mm) | Stroke (mm) | Closed Center (mm) | Open Center (mm) | Max Load (kg) | Pressure (bar) |
|---|---|---|---|---|---|---|---|
| DC2-2006TR | 1.125" / 28.575mm | 50 | 155 | 413 | 568 | 3510 | 172 |
| DC2-2008-ASAE-TR | 1.125" / 28.575mm | 50 | 205 | 514 | 719 | 3560 | 172 |
| DC2-2010TR | 1.125" / 28.575mm | 50 | 255 | 514 | 769 | 3560 | 172 |
| DC2-2018TR | 1.125" / 28.575mm | 50 | 455 | 718 | 1173 | 3560 | 172 |
| DC2-3006TR | 1.25" / 31.75mm | 76 | 155 | 413 | 568 | 8015 | 172 |
| DC2-3008-ASAE-TR | 1.25" / 31.75mm | 76 | 205 | 514 | 719 | 8015 | 172 |
| DC2-3010TR | 1.25" / 31.75mm | 76 | 255 | 514 | 769 | 8015 | 172 |
| DC2-3012TR | 1.25" / 31.75mm | 76 | 305 | 565 | 870 | 8015 | 172 |
| DC2-3014TR | 1.25" / 31.75mm | 76 | 355 | 616 | 971 | 8015 | 172 |
| DC2-3016TR | 1.25" / 31.75mm | 76 | 405 | 667 | 1072 | 8015 | 172 |
| DC2-3018TR | 1.25" / 31.75mm | 76 | 455 | 718 | 1173 | 5750 | 123 |
| DC2-3020TR | 1.25" / 31.75mm | 76 | 510 | 768 | 1278 | 4890 | 105 |
| DC2-3024TR | 1.25" / 31.75mm | 76 | 610 | 870 | 1480 | 3650 | 78 |
| DC2-3030TR | 1.5" / 38.1mm | 76 | 765 | 1022 | 1787 | 6000 | 129 |
| DC2-3036TR | 1.5" / 38.1mm | 76 | 915 | 1175 | 2090 | 3730 | 80 |
| DC2-4010TR | 2" / 50.8mm | 101 | 255 | 514 | 769 | 14250 | 172 |
| DC2-4012TR | 2" / 50.8mm | 101 | 305 | 565 | 870 | 14250 | 172 |

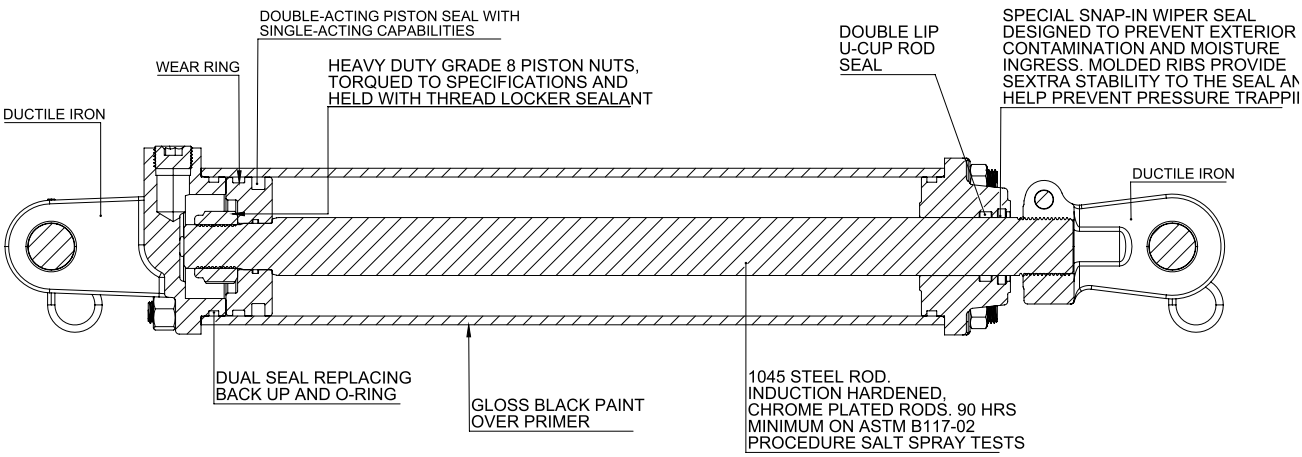


All cylinders tested at 207 bar.

# Turntables

| Stock Code | Max Load | Speed Rating | Outside Ø | Inner Ø | Height | Price Each |
|---|---|---|---|---|---|---|
| **TL1-0400** | 400kg | Up to 25km/h | 400mm | 300mm | 55mm | R2,195.00 |
| **TL1-0650** | 1 100kg | Up to 40km/h | 650mm | 550mm | 55mm | R2,995.00 |
| **TL2-0900** | 3 500kg | Up to 40km/h | 900mm | 780mm | 65mm | R3,995.00 |
| **TL2-1050** | 5 000kg | Up to 40 km/h | 1050mm | 925mm | 70mm | R 4,695.00 |
| **TL3-1100** | 6 500kg | Up to 40km/h | 1100mm | 970mm | 80mm | R4,995.00 |
| **TL4-1100T** | 12 000kg | Up to 105km/h | 1100mm | 949mm | 90mm | R 8,395.00 |
| **TL5-1100** | 10 000kg | Up to 40km/h | 1100mm | 950mm | 90mm | R 7,635.00 |
| **TL6-1100DT** | 20 000kg | Up to 105km/h | 1100mm | 940mm | 92mm | R9,995.00 |

**NOTES:**

**Guarantee will be void if ANY welding is done on turntables.**

**Turntables**

# Heights and dimensions

| Stock Code | Ø A (mm) | Ø B (mm) | Ø C (mm) | Ø D (mm) | H (mm) | Ball Ø (mm) | Min. No. Mounting Bolts | Mounting Bolt Grade 8.8 (min) |
|---|---|---|---|---|---|---|---|---|
| **TL1-0400** | 400 | 400 | 325 | 300 | 55 | 12.7 | 4 | M12 |
| **TL1-0650** | 650 | 650 | 580 | 550 | 55 | 12.7 | 6 | M12 or M14 |
| **TL2-0900** | 900 | 900 | 805 | 780 | 70 | 12.7 | 6 | M14 or M16 |
| **TL2-1050** | 1050 | 1050 | 956 | 925 | 70 | 14.5 | 6 | M14 or M16 |
| **TL3-1100** | 1100 | 1100 | 1000 | 970 | 80 | 16 | 8 | M14 or M16 |
| **TL4-1100T** | 1100 | 1111 | 983 | 949 | 90 | 22 | 8 | M18 |
| **TL5-1100** | 1100 | 1100 | 985 | 950 | 90 | 22.2 | 10 | M14 or M16 |
| **TL6-1100DT** | 1100 | 1110 | 975 | 940 | 92 | 16 & 22 | 8 | M18 |

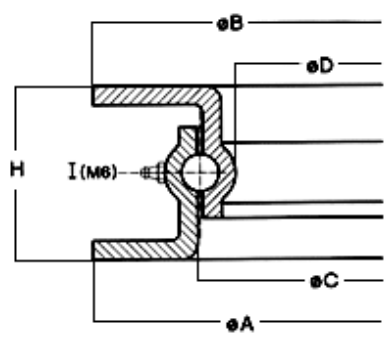


**Turntables: Heights and Dimensions**

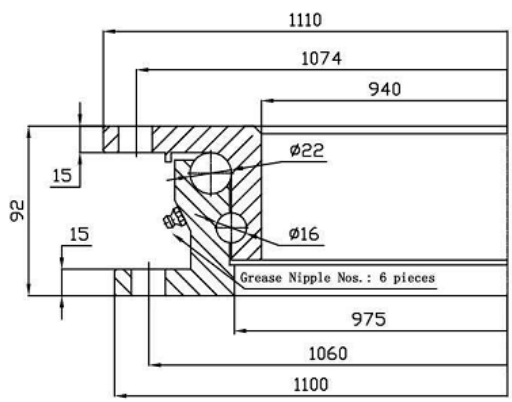


**TL6-1100DT: Heights and Dimensions**

# Complete PTO's
## 4S

| Stock Code | Description | Price Each |
|---|---|---|
| PTO-T4S-YS-01B-01B.1000 | T4 PTO Shaft 01B-01B 1000mm | R 1,595.00 |
| PTO-T4S-YS-01B-01B.1200 | T4 PTO Shaft 01B-01B 1200mm | R 1,595.00 |
| PTO-T4S-YS-01B-01B.1500 | T4 PTO Shaft 01B-01B 1500mm | R 1,895.00 |
| PTO-T4S-YS-01B-FFV1.1000 | T4 PTO Shaft 01B-FFV1 1000mm | R 2,595.00 |
| PTO-T4S-YS-01B-FFV1.1200 | T4 PTO Shaft 01B-FFV1 1200mm | R 2,695.00 |
| PTO-T4S-YS-01B-FFV1.1500 | T4 PTO Shaft 01B-FFV1 1500mm | R 2,895.00 |

# Complete PTO's
## 6S

| Stock Code | Description | Price Each |
|---|---|---|
| PTO-T6S-YS-01B-01B.1000 | T6 PTO Shaft 01B-01B 1000mm | R 2,295.00 |
| PTO-T6S-YS-01B-01B.1200 | T6 PTO Shaft 01B-01B 1200mm | R 2,195.00 |
| PTO-T6S-YS-01B-01B.1500 | T6 PTO Shaft 01B-01B 1500mm | R 2,195.00 |
| PTO-T6S-YS-01B-FFV2.1000 | T6 PTO Shaft 01B-FFV2 1000mm | R 3,195.00 |
| PTO-T6S-YS-01B-FFV2.1200 | T6 PTO Shaft 01B-FFV2 1200mm | R 3,695.00 |
| PTO-T6S-YS-01B-FFV2.1500 | T6 PTO Shaft 01B-FFV2 1500mm | R 3,695.00 |

# PTO's - Spares
## 4S

| Stock Code | Description | Price Each |
|---|---|---|
| PTOTP55X8 | Tension Pin 55x8 S4 i/tube | R11.00 |
| PTOTP60X8 | Tension Pin 60x8 S4 o/tube | R3.00 |
| PTO4S-S-B47 | S4 in/shield bearing | R 15.00 |
| PTO4S-S-B54 | S4 out/shield bearing | R 15.00 |
| PTO4S-S-YS-INCONE-FFV | S4 inner shield cone YS for FFV | R 55.00 |
| PTO4S-S-YS-INCONE | S4 inner shield cone YS | R 55.00 |
| PTO4S-S-YS-OUTCONE | S4 outer shield cone YS | R 55.00 |
| PTO4S.01 | Cross journal 74.6x27 S4 | R 110.00 |
| PTO4S.07 | T4 i/tube yoke 92x36.1 | R 275.00 |
| PTO4S.0501B | S4 Splined QR yoke 108 | R 225.00 |
| PTO4S.SB | S4 Shear bolt clutch 1480Nm | R 455.00 |
| PTO4S.RA1 | S4 Overrun clutch 2400Nm | R545.00 |

PTO-T4S-YS-01B-01B.1000

# PTO's - Spares

## 6S

| Stock Code | Description | Price Each |
|---|---|---|
| PTOTP70X10 | Tension Pin 70x10 S6 i/tube | R16.00 |
| PTOTP80X10 | Tension Pin 80x10 S6 o/tube | R17.00 |
| PTO6S-S-B59.5 | S6 in/shield bearing | R 21.00 |
| PTO6S-S-B68.5 | S6 out/shield bearing | R 21.00 |
| PTO6S.FFV2.006 | Clutch 6S-bushing | R 35.00 |
| PTO6S.FFV2.003 | Clutch 6S-friction plate | R 55.00 |
| PTO6S.FFV2.002 | Clutch 6S-internal disc | R 70.00 |
| PTO6S.FFV2.001 | Clutch S6-pressure plate | R73.00 |
| PTO6S-S-YS-INCONE | S6 inner shield cone Cat III | R 115.00 |
| PTO6S-S-YS-OUTCONE | S6 outer shield cone Cat III | R 110.00 |
| PTO6S-S-YS-INCONE-FFV | S6 inner shield cone YS for FFV | R 105.00 |
| PTO6S.05A35 | S6 plain bore yoke - 35 / 13mm pin hole | R 215.00 |
| PTO6S.FFV2.004 | Clutch 6S-hub | R430.00 |
| PTO6S.SB | S6 shear bolt clutch 2100Nm | R 795.00 |
| PTO6S.FFV2 | S6 friction clutch 2 disc 1200Nm | R 1,595.00 |
| PTO6SWA.0513B | S6 wide angle joint CPTE | R 3,295.00 |

PTO-T6S-YS-01B-FFV2.1000

# Couplers
## *With Brakes*

| Image | Stock Code | Capacity | Head | Body Type | Price |
|---|---|---|---|---|---|
| 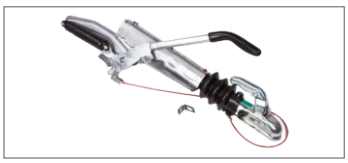 | **CBK1300B** | 1300kg | 50mm Ball | Delta | R4,440.00 |
| 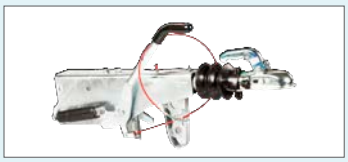 | **CBK2000BM** | 1100kg to 2000kg | 50mm Ball | Mono - 80x80 | R5,540.00 |
| | **CBK2000C** | 1100kg to 2000kg | 50mm Ball | Delta | R4,210.00 |
| | **CBK2000D** | 1100kg to 2000kg | 40mm Din Eye | Delta | R5,880.00 |
| | **CBK2000E** | 1100kg to 2000kg | 50mm Ball | Delta- Short Lever | R4,440.00 |
| 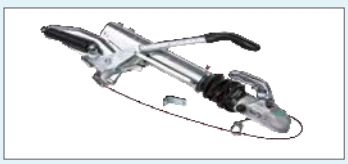 | **CBK2700B** | 1600kg to 2700kg | 50mm Ball | Delta | R 4,795.00 |
| 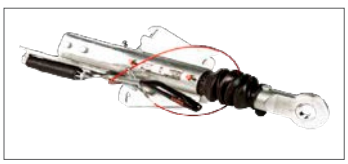 | **CBK2700D** | 1600kg to 2700kg | 40mm Din Eye | Delta | R 6,895.00 |

| Image | Stock Code | Capacity | Head | Body Type | Price |
|---|---|---|---|---|---|
| 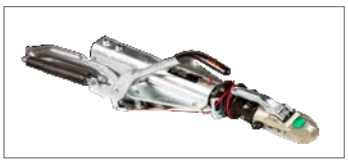 | **CBK3000B** | 2000kg to 3000kg | 50mm Ball | Delta | R 6,595.00 |
| 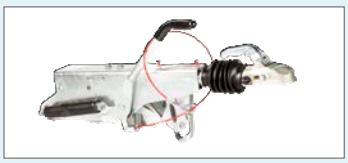 | **CBK3000BM1** | 2000kg to 3000kg | 50mm Ball | Mono - 80x80 | R9,695.00 |
| 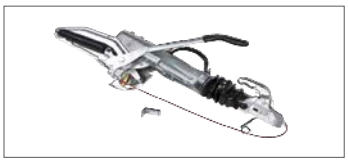 | **CBK3500B** | 2700kg to 3500kg | 50mm Ball | Delta | R 8,275.00 |
| 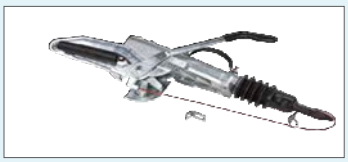 | **CBK3500D** | 2700kg to 3500kg | 40mm Din Eye | Delta | R10,750.00 |

## *Without Brakes*

| Image | Stock Code | Capacity | Head | Body Type | Price |
|---|---|---|---|---|---|
| | **CUK0750** | 750kg | 50mm Ball | Straight | R 475.00 |
| | **CUK2700FY** | 2700kg | 50mm Ball | Straight | R 895.00 |
| | **CBKL01** | Coupler Lock (Knott) | | | R 85.00 |

# *Tow Eyes*

| Image | Stock Code | Capacity | Head | Body Type | Price |
|---|---|---|---|---|---|
| | **C01132** | 6000kg<br>Low Speed | 35mm Eye | Tow Eye | R 1,195.00 |
| | **C07926** | 6000kg<br>Low Speed | 50mm Eye | Tow Eye | R1,095.00 |
| | **C07933** | 10 000kg<br>Low Speed | 40mm Eye | Tow Eye | R 995.00 |
| | **C07202** | 2 700kg<br><40km/h<br><br>2 400kg<br>>40km/h | 50mm Eye | Bolt-on Tow Eye | R4,495.00 |
| | **C07217** | 14 000kg<br>Low Speed | 50mm | Bolt-on Tow Eye | R 2,495.00 |
| | **C07206** | 30000kg<br>Low Speed | 50mm Eye | Bolt-on Tow Eye | R4,595.00 |
| | **C07230** | 3 000kg<br>>km/h | 40mm Eye | Bolt-on Tow Eye | R3,295.00 |

# Jockey Wheels & Clamps

| Stock Code | Description | Max Load | Stroke | Shaft Ø | Wheel | Price Each |
|---|---|---|---|---|---|---|
| **JCB42/5.5S** | Jockey Wheel | 100kg | 200mm | 42mm | 5.5" Single Steel | R 575.00 |
| **JCB48/8SL** | Jockey Wheel | 150kg | 300mm | 48mm | 8" Steel Single | R 725.00 |
| **JCB60/8SL** | Jockey Wheel | 300kg | 300mm | 60mm | 8" Steel Single | R 1,075.00 |
| **JCB60/8DL** | Jockey Wheel | 300kg | 300mm | 60mm | 8" Steel Double | R 1,395.00 |
| **J0028E** | Jockey Wheel | 600kg | 300mm | 57.2mm | 230 x 80 mm Single | R 1,995.00 |
| **JCC42** | Pressed Clamp | - | - | 42mm | - | R 95.00 |
| **JCC48** | Pressed Clamp | - | - | 48mm | - | R135.00 |
| **JCB48** | Cast Clamp | - | - | 48mm | - | R 170.00 |
| **JCC60** | Pressed Clamp | - | - | 60mm | - | R 225.00 |
| **JC48/P700** | Prop Stand | 150kg | - | 48mm | Flat Plate | R 195.00 |

**JCB42/5.5S**

**JCB48/8SL**

JCB60/8SL

JCB60/8DL

J0028E

JCC42

JCC48

JCB48

JCC60

JC48/P700

# Parking Jacks

| Stock Code | Outer Tube | Inner Tube | Stroke | Mass | Load | Total Length | Price Each |
|---|---|---|---|---|---|---|---|
| **J0013** | Ø 48mm | Ø 42mm | 195mm | 3.0kg | 150kg | 500mm | R 475.00 |
| **J0007** | ☐ 60mm | ☐ 50mm | 255mm | 6.0kg | 600kg | 590mm | R 1,195.00 |
| **J0005** | ☐ 60mm | ☐ 50mm | 350mm | 7.0kg | 800kg | 565mm | R1 325.00 |
| **J0012** | Ø 57mm | Ø 50mm | 350mm | 5.6kg | 900kg | 540mm | R 1,095.00 |
| **J0017** | Ø 51mm | Ø 45mm | 250mm | 5.6kg | 900kg | 430mm | R 1,175.00 |
| **J0010** | ☐ 80mm | ☐ 70mm | 300mm | 13.0kg | 1200kg | 670mm | R 1,295.00 |
| **J0018** | Ø 57mm | Ø 50mm | 370mm | 6.5kg | 1300kg | 560mm | R 1,375.00 |
| **J0006** | ☐ 70mm | ☐ 60mm | 350mm | 8.4kg | 1500kg | 565mm | R1,575.00 |
| **J0009** | ☐ 70mm | ☐ 60mm & ☐ 50mm | 710mm | 12.5kg | 1500kg | 595mm | R 2,195.00 |
| **J0014** | ☐ 80mm | ☐ 70mm & ☐ 60mm | 576mm | 21.0kg | 2500kg | 685mm | R 2,595.00 |
| **J0008** | ☐ 70mm | ☐ 60mm | 300mm | 12.6kg | 3000kg | 620mm | R1,750.00 |
| **J0015** | ☐ 70mm | ☐ 60mm | 200mm | 16.5kg | 4000kg | 485mm | R 2,995.00 |
| **J0016** | ☐ 70mm | ☐ 60mm | 170mm | 13.8kg | 6000kg | 460mm | R 2,795.00 |
| **J0021** | Bush for J0017 and J0018 parking stands | | | | | | R 115.00 |
| **JCCJ01** | - | - | - | 4.24kg | 800kg | 675mm | R780.00 |
| **JCCH01** | Crank Handle for JCCJ01 | | | | | 670mm | R130.00 |

**J0013**

**J0007**

J0005 / J0006

J0012

J0017

J0010

J0018

J0009

J0014

J0008

JCCJ01

JCCH01

# Stabiliser Legs

| Stock Code | Stroke Length | Retracted Length | Extended Length | Mass | Linear Load Capacity | Price Each |
|---|---|---|---|---|---|---|
| **J0044ES** | 180mm | 380mm | 560mm | 6.3kg | 500kg | R745.00 |
| **J0044E** | 290mm | 520mm | 810mm | 6.9kg | 500kg | R815.00 |
| **J0044EL** | 430mm | 690mm | 1120mm | 8.9kg | 500kg | R885.00 |

**J0044EL / J0044E / J0044ES**

# Leaf Springs

| Stock Code | No. of Blades | C (mm) | ØD (mm) | ØE (mm) | L (mm) | T (mm) | W (mm) | Max Load/ Pair | Rate (kg/ mm) | Price Each |
|---|---|---|---|---|---|---|---|---|---|---|
| **S03/27** | 3 | 80 | 12.5 | 12.5 | 685 | 6 | 44.5 | 560kg | 3.44 | R 305.00 |
| **S04/27** | 4 | 80 | 12.5 | 12.5 | 685 | 6 | 44.5 | 750kg | 4.688 | R 365.00 |
| **S05/27** | 5 | 80 | 12.5 | 12.5 | 685 | 6 | 44.5 | 950kg | 5.936 | R 415.00 |
| **S06/27** | 6 | 80 | 12.5 | 12.5 | 685 | 6 | 44.5 | 1 150kg | 7.188 | R 480.00 |
| **S07/27** | 7 | 80 | 12.5 | 12.5 | 685 | 6 | 44.5 | 1 350kg | 8.438 | R 510.00 |
| **S08/27** | 8 | 80 | 12.5 | 12.5 | 685 | 6 | 44.5 | 1 500kg | 9.725 | R 555.00 |
| **S10/27** | 10 | 80 | 12.5 | 12.5 | 685 | 6 | 44.5 | 1 800kg | 11.25 | R 675.00 |
| **S08/36** | 8 | 80 | 12.5 | 12.5 | 1020 | 8 | 50 | 2 000kg | 12.5 | R1,190.00 |
| **S10/36** | 10 | 80 | 12.5 | 12.5 | 1020 | 8 | 50 | 2 500kg | 15.625 | R 1,395.00 |
| **S05/40** | 5 | 95 | 16 | 20 | 1100 | 10 | 70 | 3 000kg | 15.79 | R 1,675.00 |
| **S08/40** | 8 | 95 | 16 | 20 | 1100 | 10 | 70 | 4 000kg | 21.053 | R 2,395.00 |
| **S12/40** | 12 | 95 | 16 | 20 | 1100 | 10 | 70 | 6 000kg | 31.579 | R 2,895.00 |
| **S13/40** | 13 | 95 | 16 | 20 | 1100 | 10 | 70 | 8 000kg | 42.105 | R 2,995.00 |

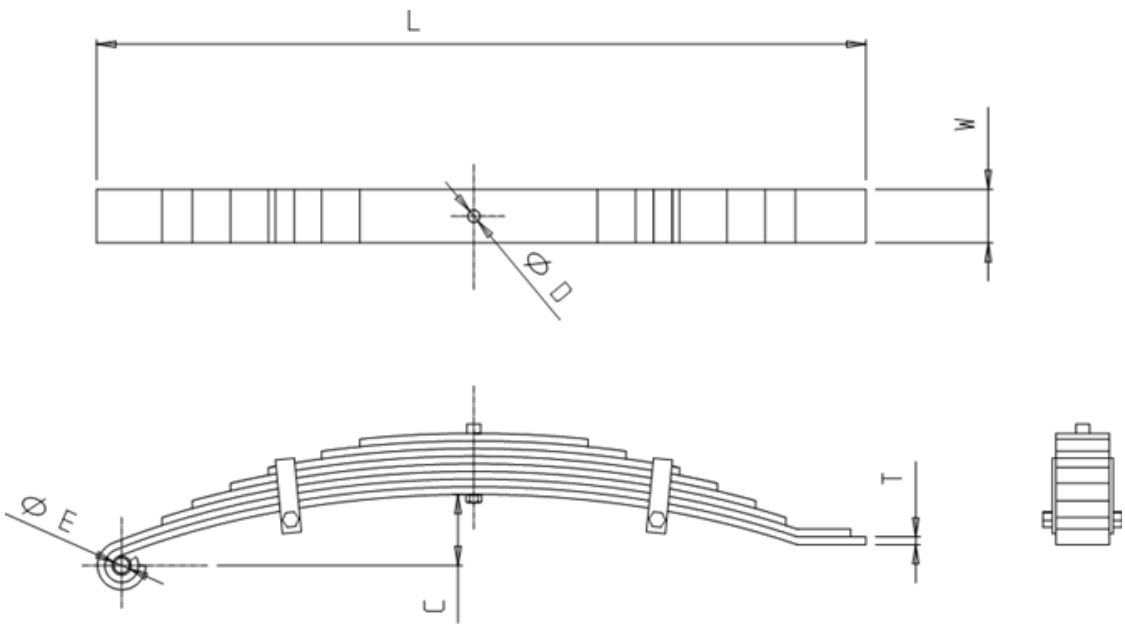


Prices are exclusive of VAT and subject to change without prior notice. (E & OE Notice - pg100)

S04/27

S07/27

S08/27

S10/27

S08/36

S10/36

S08/40

S12/40

# Spring Kits

| Stock Code | No. of Blades | Max Load/Pair | Length | Blade Size (mm) | Supported Axle | Price Each |
|---|---|---|---|---|---|---|
| **SKIT3000** | 5 | 3 000kg | 1100mm | 70 x 10 | ☐ 55 | R 2,495.00 |
| **SKIT4000** | 8 | 4 000kg | 1100mm | 70 x 10 | ☐ 60 | R 3,295.00 |
| **SKIT6000** | 12 | 6 000kg | 1100mm | 70 x 10 | ☐ 70 | R 3,795.00 |
| **SKIT8000** | 13 | 8 000kg | 1100mm | 70 x 10 | ☐ 80 | R 3,895.00 |

**SKIT4000**

# Spring Mounting Kits

| Stock Code | Supported Axle | Spring Width | U-Bolts | Plate | Hanger Set | Price Each |
|---|---|---|---|---|---|---|
| **TC40R44.5G** | Ø 40mm | 44.5mm | SU40R | S5HP40 | SH45 | R182.00 |
| **TC40S44.5G** | ☐ 40mm | 44.5mm | SU40S | S5HP40 | SH45 | R 165.00 |
| **TC45S44.5G** | ☐ 45mm | 44.5mm | SU45S | S5HP45 | SH45 | R 225.00 |
| **TC50S50G** | ☐ 50mm | 50.0mm | SU50S | S5HP50 | SH50 | R 235.00 |

## Spring Mounting Kit Components

| | | | |
|---|---|---|---|
| 1 X 5 hole plate | 2 x U-bolts & nuts | 1 x Hanger Bracket | 1 X Slipper Bracket |
| 1 x Saddle (TC40R44.5G Only) | | | |

**TC40R44.5G**

**TC40S44.5G**

**TC45S44.5G**

**TC50S50G**

# Spring Mounting Kits Components

| Stock Code | U-Bolt (mm) | | | | | | Plate (mm) | | | | | | | Hanger (mm) | | | | | | |
|---|---|---|---|---|---|---|---|---|---|---|---|---|---|---|---|---|---|---|---|---|
| | A | B | C | D | T | Radius | C1 | C2 | d1 | D2 | S1 | S2 | t | Bolt | Nut | H | J | K | t1 | W |
| TC40R44.5G | 131 | 68 | 58 | | M10 | 24.5 | 58 | 58 | 11 | 15 | 90 | 80 | 8 | M12X75G | M12NY | 63 | 46 | 40 | 6 | 48 |
| TC40S44.5G | 116 | 58 | 58 | 5 | M10 | | 58 | 58 | 11 | 15 | 90 | 80 | 8 | M12X75G | M12NY | 63 | 46 | 40 | 6 | 48 |
| TC45S44.5G | 128 | 50 | 61 | 5 | M12 | | 61 | 61 | 13 | 15 | 90 | 90 | 10 | M12X75G | M12NY | 63 | 46 | 40 | 6 | 48 |
| TC50S50G | 169 | 80 | 67 | 5 | M12 | | 67 | 67 | 13 | 16 | 100 | 100 | 10 | M12X90G | M12NY | 75 | 58 | 40 | 6 | 55 |
| SKIT3000 | 150 | 55 | 77 | 5 | M16 | | 92 | 77 | 18 | 25 | 125 | 120 | 10 | M20X120G | M20NY | 80 | 56 | 90 | 6 | 75 |
| SKIT4000 | 185 | 55 | 82 | 5 | M16 | | 92 | 82 | 18 | 25 | 125 | 125 | 10 | M20X120G | M20NY | 80 | 56 | 90 | 6 | 75 |
| SKIT6000 | 240 | 55 | 92 | 5 | M16 | | 97 | 92 | 18 | 25 | 140 | 140 | 10 | M20X120G | M20NY | 80 | 56 | 90 | 6 | 75 |
| SKIT8000 | 270 | 55 | 102 | 5 | M16 | | 102 | 92 | 18 | 25 | 140 | 140 | 10 | M20X120G | M20NY | 80 | 56 | 90 | 6 | 75 |

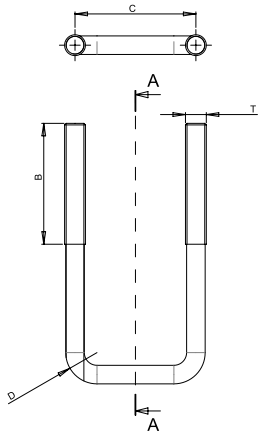


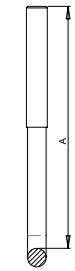


SECTION A-A

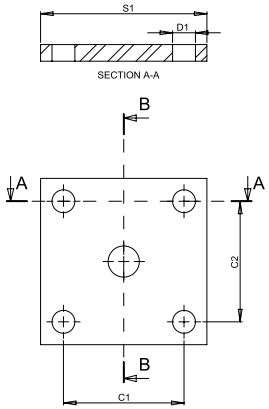


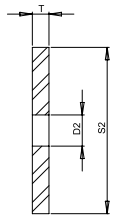


SECTION B-B

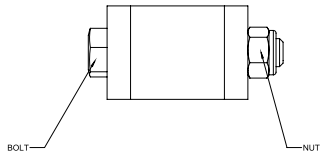


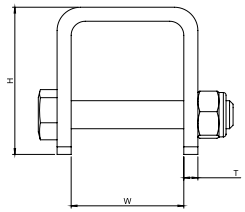


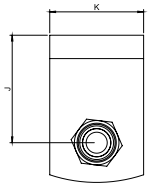

# Mechanical Spring Kits
## 3 500kg - 36 000kg

| Stock Code | No. of Blades | Max Load | Orientation | Blade Size (mm) | Supported Axle | Price Each |
|---|---|---|---|---|---|---|
| **SKIT3500-1** | 7 | 3 000kg | Overslung Single | 70 x 10 | ☐ 70 | R6,995.00 |
| **SKIT3500-2** | 7 | 7 000kg | Overslung Tandem | 70 x 10 | ☐ 70 | R 16,295.00 |
| **SKIT5000-1** | 6 | 5 000kg | Overslung Single | 76 x 10 | ☐ 80 | R9,170.00 |
| **SKIT5000-2** | 6 | 10 000kg | Overslung Tandem | 76 x 10 | ☐ 80 | R22,510.00 |
| **SKIT9000O-1** | 7 | 9 000kg | Overslung Single | 76 x 16 | Ø 127mm | R18,010.00 |
| **SKIT9000O-2** | 7 | 18 000kg | Overslung Tandem | 76 x 16 | Ø 127mm | R35,440.00 |
| **SKIT9000O-3** | 7 | 27 000kg | Overslung Tridem | 76 x 16 | Ø 127mm | R53,270.00 |
| **SKIT9000U-1** | 7 | 9 000kg | Underslung Single | 76 x 16 | Ø 127mm | R18,260.00 |
| **SKIT9000U-2** | 7 | 18 000kg | Underslung Tandem | 76 x 16 | Ø 127mm | R36,270.00 |
| **SKIT9000U-3** | 7 | 27 000kg | Underslung Tridem | 76 x 16 | Ø 127mm | R55,020.00 |
| **SKIT9000U-4** | 7 | 36 000kg | Underslung Quadrem | 76 x 16 | Ø 127mm | R75,020.00 |

SKIT3500-2

SKIT5000-1

# Parabolic Springs

| Stock Code | No. of Blades | Max Load | Price Each |
|---|---|---|---|
| **S02/27-14x50P** | 2 | 1250kg | R647.00 |

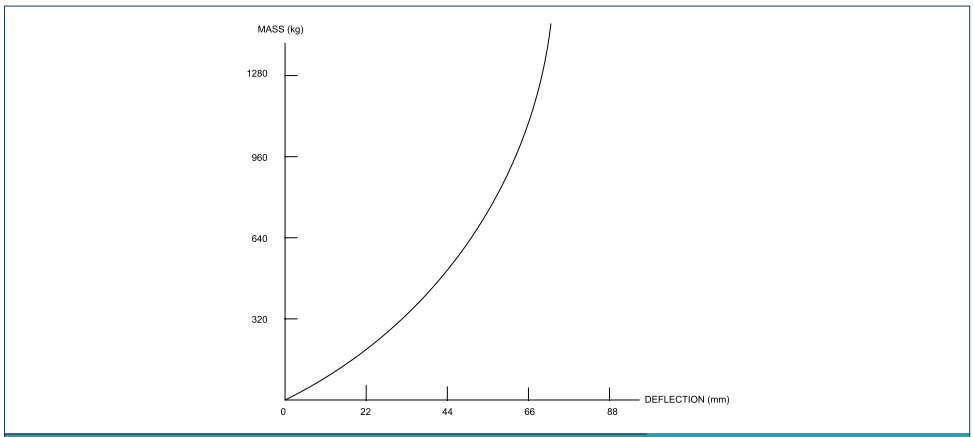


**Load Deflection**

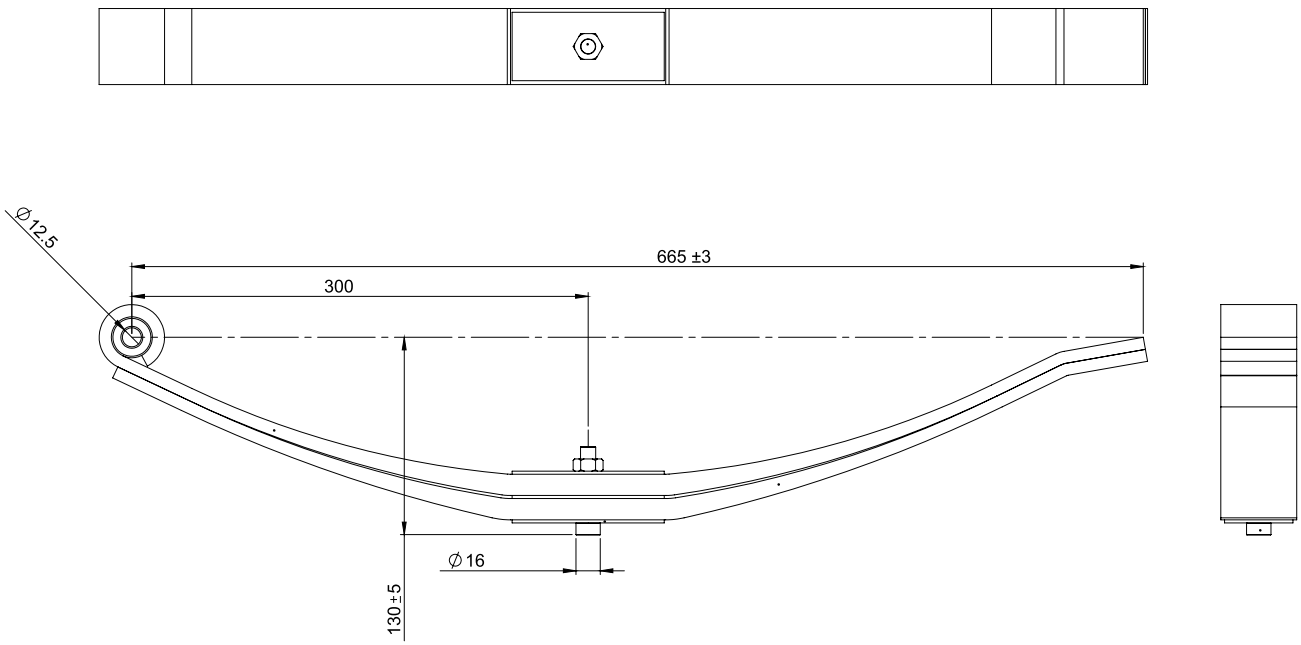

# U-Bolts

| Stock Code | Description | Size | Price Each |
|---|---|---|---|
| **SU40S** | U-Bolt 40mm Square | M10x50x125 | R23.00 |
| **SU40R** | U-Bolt 40mm Round | M10x50x130 | R25.00 |
| **SU45S** | U-Bolt 45mm Square | M12x50x140 | R37.00 |
| **SU45S.170** | U-Bolt 45mm Square | M12x50x170 | R 55.00 |
| **SU45R** | U-Bolt 45mm Round | M12x50x140 | R40.00 |
| **SU50S** | U-Bolt 50mm Square | M12x50x165 | R37.00 |
| **SU50R** | U-Bolt 50mm Round | M12x50x180 | R47.00 |
| **SU55S** | U-Bolt 55mm Square | M16x60x150 | R 120.00 |
| **SU60S** | U-Bolt 60mm Square | M16x65x185 | R145.00 |
| **SU70S** | U-Bolt 70mm Square | M16x75x240 | R 160.00 |
| **SU70S-174** | U-Bolt 70mm Square | M16x75x240 | R 175.00 |
| **SU80S** | U-Bolt 80mm Square | M16x85x270 | R 205.00 |
| **SU080-M22** | U-Bolt 80mm Square | M22x80x255 | R 595.00 |
| **SU150S** | U-Bolt 150mm Square | | R313.00 |

**SU50S**

# 5 Hole Plates

| Stock Code | Description | Size | Price Each |
|---|---|---|---|
| **S5HP40** | 5 Hole Plate 40mm | 90x80x8mm | R40.00 |
| **S5HP45** | 5 Hole Plate 45mm | 90x90x10mm | R 60.00 |
| **S5HP50** | 5 Hole Plate 50mm | 100x100x10mm | R 80.00 |
| **S5HP55** | 5 Hole Plate 55mm | 125x120x10mm | R145.00 |
| **S5HP60** | 5 Hole Plate 60mm | 125x125x10mm | R 155.00 |
| **S5HP70** | 5 Hole Plate 70mm | 140x140x10mm | R 175.00 |
| **S5HP80** | 5 Hole Plate 80mm | 140x140x10mm | R 195.00 |
| **SA0006001** | 5 Hole Plate for 80mm High Speed Square Axles | | R334.00 |
| **SA0008001** | Spring Seat for 80mm High Speed Square Axles | | R573.00 |
| **S5HP90X75** | 5 Hole Plate for 90mm Low Speed Square Axles | | R 315.00 |
| **SM0011002** | Rod bracket for 90mm & 100mm Low Speed Square Axles | | R923.00 |
| **SM0012002** | Spring Seat for 90mm & 100mm Low Speed Square Axles | | R419.00 |

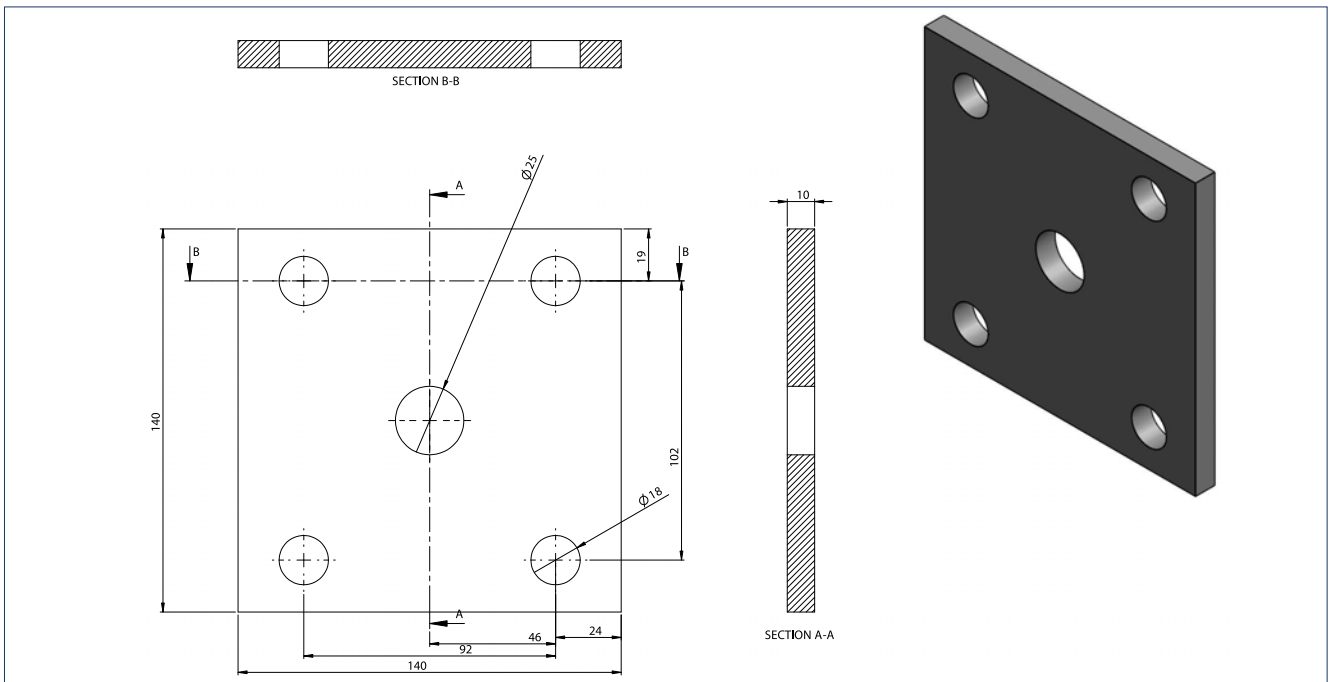


**Technical Drawing: S5HP80**

# Saddles

| Stock Code | Description | Price Each |
|---|---|---|
| **S1HP45x08** | Flat Saddle (Square Axles) | R21.00 |
| **SS40** | Saddle 40mm Round | R23.00 |

# Bolts

| Stock Code | Description | Price Each |
|---|---|---|
| **M12X75G** | Bolt M12x75mm Galvanised | R14.00 |
| **M20X300G** | Bolt M20x300mm Galvanised | R152.00 |

**SS40**

# Hangers

| Stock Code | Description | Price Each |
|---|---|---|
| **SH45** | Hanger Set 45mm | R 80.00 |
| **SH50** | Hanger Set 50mm (STD) | R90.00 |
| **SH70** | Hanger Set 70mm (STD) | R167.00 |
| **SH70H-10** | Hanger 70mm High Speed | R 375.00 |
| **SH70S-10** | Slipper 70mm High Speed | R515.00 |
| **SH70S-10LS** | Hanger 70mm Low Speed | R275.00 |
| **SH75A** | Hanger 75mm Low Speed | R995.00 |
| **SMO001001** | Hanger Front Overslung 76mm | R2,510.00 |
| **SMO003001** | Hanger Middle Overslung 76mm | R1,260.00 |
| **SMO002001** | Hanger Rear Overslung 76mm | R1,010.00 |

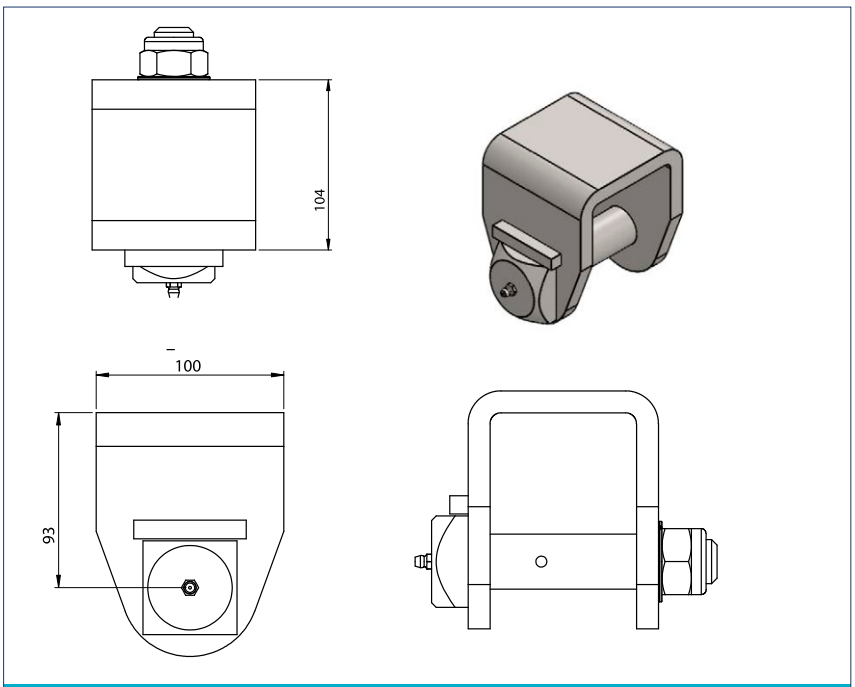


**Technical Drawing: SH75A**

# Wheel Studs

| Stock Code | Description | Size | Price Each |
|---|---|---|---|
| **M12WS** | M12 Wheel Stud | 41x14x21x1,5mm | R8.00 |
| **M14WSR** | M14 Wheel Stud | 48x15,5x14x1,5mm | R23.00 |
| **M16WS** | M16 Wheel Stud | 45x17,2x16x1,5mm | R27.00 |
| **M18WS** | M18 Wheel Stud | 49x19,3x18x1,5mm | R37.00 |
| **M18WSBADR.66** | M18 Wheel Stud BRK ADR | 66x21,5x18x1,5mm | R162.00 |
| **M20WSADR** | M20 Wheel Stud ADR | 70x21,5x20x1,5mm | R67.00 |
| **M20WSBADR** | M20 Wheel Stud BRK ADR | 87x21,5x20x1,5mm | R112.00 |
| **M22WS** | M22 Wheel Stud FAD | 65x24,2x22x1,5mm | R228.00 |
| **M22WS-105** | M22 Wheel Stud | 94x24x22x1,5mm | R67.00 |
| **M22WS.122** | M22 Wheel Stud Alluminium Rims | | R77.00 |
| **M22WSA** | M22 Wheel Stud ALION | | R73.00 |
| **M22WSA.88** | M22 Wheel Stud ALION | | R77.00 |
| **M22WSADR** | M22 Wheel Stud ADR | 71x24,1x22x1,5mm | R76.50 |
| **M22WSADR.90** | M22 Wheel Stud ADR | 84x24,1x22x1,5mm | R73.00 |

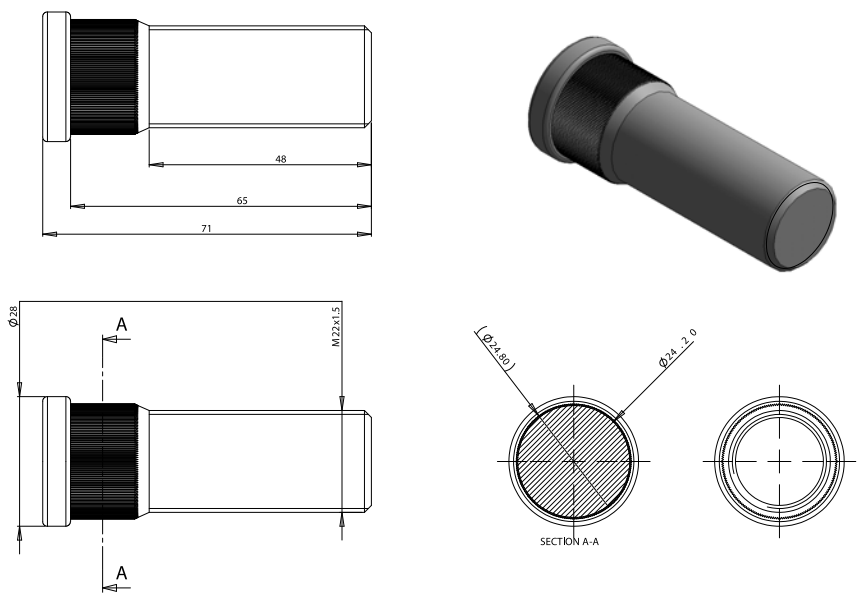


**Technical Drawing: M22WS**

# Wheel Nuts

| Stock Code | Description | Size | Price Each |
|---|---|---|---|
| **M12WN** | M12 Wheel Nut | 41x14x12x1,5mm | R7.00 |
| **M14WN** | M14 Wheel Nut | 48x15,5x14x1,5mm | R24.00 |
| **M16WN** | M16 Wheel Nut | 45x17,2x16x1,5mm | R15.00 |
| **M18WNR16** | M18 Wheel Nut | 49x19,3x18x1,5mm | R12.00 |
| **M20WNADR** | M20 Wheel Nut | 66x21,5x18x1,5mm | R23.00 |
| **M22WN** | M22 Wheel Nut | 70x21,5x20x1,5mm | R64.00 |
| **M22WNADR** | M22 Wheel Nut | 87x21,5x20x1,5mm | R31.00 |
| **M22WNF** | M22 Wheel Nut Flanged | 65x24,2x22x1,5mm | R30.00 |

# Nylock Nuts

| Stock Code | Description | Size | Price Each |
|---|---|---|---|
| **M12NY** | M12 Nylock Nut | 41x14x12x1,5mm | R3.00 |
| **M14NY** | M14 Nylock Nut | 48x15,5x14x1,5mm | R17.00 |
| **M16NY** | M16 Nylock Nut | 45x17,2x16x1,5mm | R11.00 |
| **M20NY** | M20 Nylock Nut | 49x19,3x18x1,5mm | R8.00 |
| **M22NY** | M22 Nylock Nut | 66x21,5x18x1,5mm | R28.00 |

# Castle Nuts

| Stock Code | Description | Size | Price Each |
|---|---|---|---|
| **M18CNW** | M18 Castle Nut Flanged | M18x1,5 (27mm) | R20.00 |
| **M24CNW** | M24 Castle Nut Flanged | M24x1,5 (36mm) | R30.00 |
| **M33CN2** | M33 Castle Nut | M33x2,0 (50mm) | R83.00 |
| **M36CN2** | M36 Castle Nut | M36x2,0 (55mm) | R112.00 |
| **M39CN** | M39 Castle Nut | M39x2,0 | R61.00 |

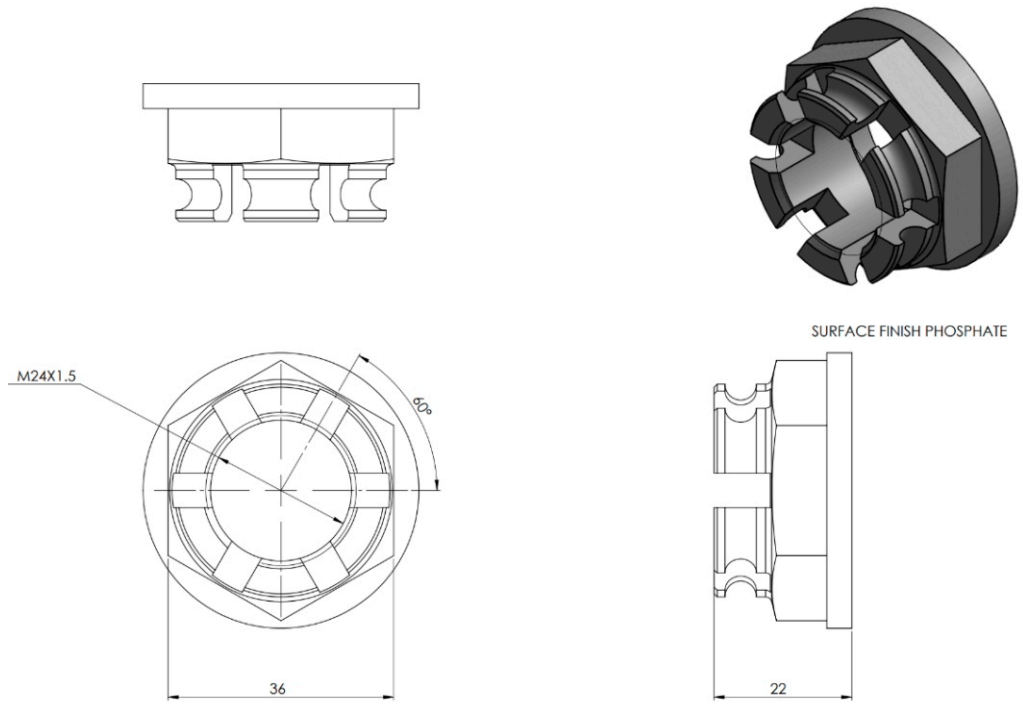


**Technical Drawing: M24CNW**

# Grease Caps

| Stock Code | Description | Price Each |
|---|---|---|
| GCAP47.1 | Grease Cap 47mm | R23.00 |
| GCAP52.1 | Grease Cap 52mm | R27.00 |
| GCAP62.1 | Grease Cap 62mm | R29.00 |
| GCAP72.1 | Grease Cap 72mm | R138.00 |
| GCAP80.1 | Grease Cap 80mm | R73.00 |
| GCAP80.2 | Grease Cap 80mm ADR | R 75.00 |
| GCAP85.1 | Grease Cap 85mm | R77.00 |
| GCAP85.2 | Grease Cap 85mm | R84.00 |
| GCAP90.1 | Grease Cap 90mm | R186.00 |
| GCAP100.1 | Grease Cap 100mm | R 215.00 |
| GCAP100.2 | Grease Cap 100mm ADR | R 125.00 |
| GCAP110.1 | Grease Cap 110mm | R95.00 |
| GCAP110.2 | Grease Cap 110mm | R 155.00 |
| GCAP160.0 | Grease Cap 160mm AF90 & AFB90C | R156.00 |
| GCAP160.1 | Grease Cap 160mm ADR 90 & 100mm SQ | R 225.00 |
| GCAP180.0 | Grease Cap 180mm | R165.00 |
| GCAP185.0 | Grease Cap 185mm 164 DIA with gasket | R 475.00 |
| GCAP220.1 | Grease Cap 220mm ADR 150mm SQ | R895.00 |

Grease Caps

# Knott Braked Coupler Spares

## Pressed Steel Bodies

| No. | Stock Code | Description | Price Each |
|---|---|---|---|
| 2 | **CBKS07** | Guide Bearing, excl. lock Brown with white ferrule KF13/20 | R182.00 |
| 2 | **CBKS07S** | Guide Bearing, incl. lock New, Black Snapper KF13/20 | R202.00 |
| 2 | **CBKS09** | Guide Bearing, excl. lock Brown with white ferrule KF27/30 | R212.00 |
| 2 | **CBKS09S** | Guide Bearing, incl. lock New, Black Snapper KF27/30 | R212.00 |
| 3 | **CBKS19** | Grease Nipple Press in KF13/20/27 & 30 | R19.00 |
| 4 | **CBKS05** | Drawbar 45mm diameter KF13 & KF20 | R1,220.00 |
| 4 | **CBKS08** | Drawbar 50mm diameter KF27 | R1,540.00 |
| 4 | **CBKS08-8** | Drawbar 50mm diameter with 14mm bolt holes KF30 | R1,540.00 |
| 5 | **CBKS06** | Drawbar Stop Ring KF20 | R152.00 |
| 5 | **CBKS21** | Drawbar Stop Ring KF27 & KF30 | R25.00 |
| 6 | **CHDK1300** | Shock Absorber KF13 - 87 0007 09 | R1,670.00 |
| 6 | **CHDK2000E** | Shock Absorber KF20 - 87 1011 09 | R700.00 |
| 6 | **CHDK2000** | Shock Absorber KF20 - 87 0011 09 | R1,350.00 |
| 6 | **CHDK2700** | Shock Absorber KF27 - 87 0039 09 | R1,500.00 |
| 6 | **CHDK3000** | Shock Absorber KF30 - 87 0039 09-14 | R1,350.00 |
| 7 | **CBKBALL45A** | Coupling Head Ball Type 50mm KF13 | R 1,095.00 |
| 7 | **CBKBALL45** | Coupling Head Ball Type 50mm KF20 | R 895.00 |
| 7 | **CBKBALL50** | Coupling Head Ball Type 50mm KF27 | R1,295.00 |
| 7 | **CBKBALL50A** | Coupling Head Ball Type 50mm KF30 | R1,495.00 |
| 13 | **CBKS01** | Bellow KF13 & KF20 | R 165.00 |
| 13 | **CBKS17** | Bellow KF27 & KF30 | R152.00 |
| 20 | **CBKS03** | Hand Brake Lever Complete KF13, KF20 & KF27 | R2,290.00 |
| 21 | **BCK3.5x1200** | Brake Away Cable Complete 1050mm | R 210.00 |
| 22 | **CBKS04** | Hand Brake Damper KF13, KF20, KF27 & KF30 | R1,220.00 |

**NOTES:**

Refer to image on the next page.

# Pressed Steel Bodies

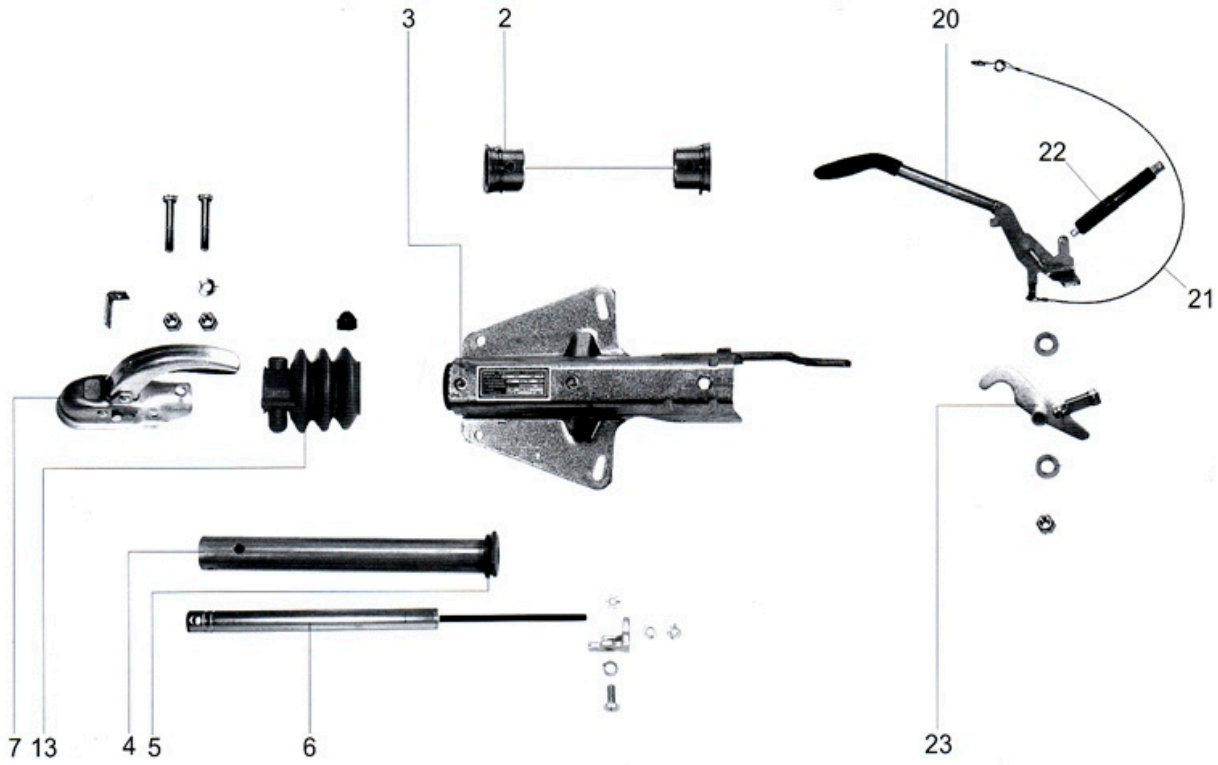

# Knott Braked Coupler Spares

## Cast Iron Bodies

| No. | Stock Code | Description | Price Each |
|---|---|---|---|
| 3 | **CBKS20** | Grease Nipple M12 KF35 | R52.00 |
| 4 | **CBKS12** | Draw Tube 60mm diameter KF35 | R1,690.00 |
| 5 | **CBKS13** | Draw Tube Stop Ring KF35 | R20.00 |
| 6 | **CHDK3500** | Shock Absorber / Hydraulic Damper KF35 - 87 0036 09 | R1,540.00 |
| 7 | **CBKBALL60** | Coupling Head Ball Type 50mm KF35 | R 1,995.00 |
| 13 | **CBKS02** | Bellow KF35 | R 235.00 |
| 20 | **CBKS10** | Hand Brake Lever Complete KF35 | R2,600.00 |
| 21 | **BCK3.5x1200** | Brake Away Cable Complete 1050mm | R 210.00 |
| 22 | **CBKS11** | Hand Brake Damper KF35 | R1,580.00 |

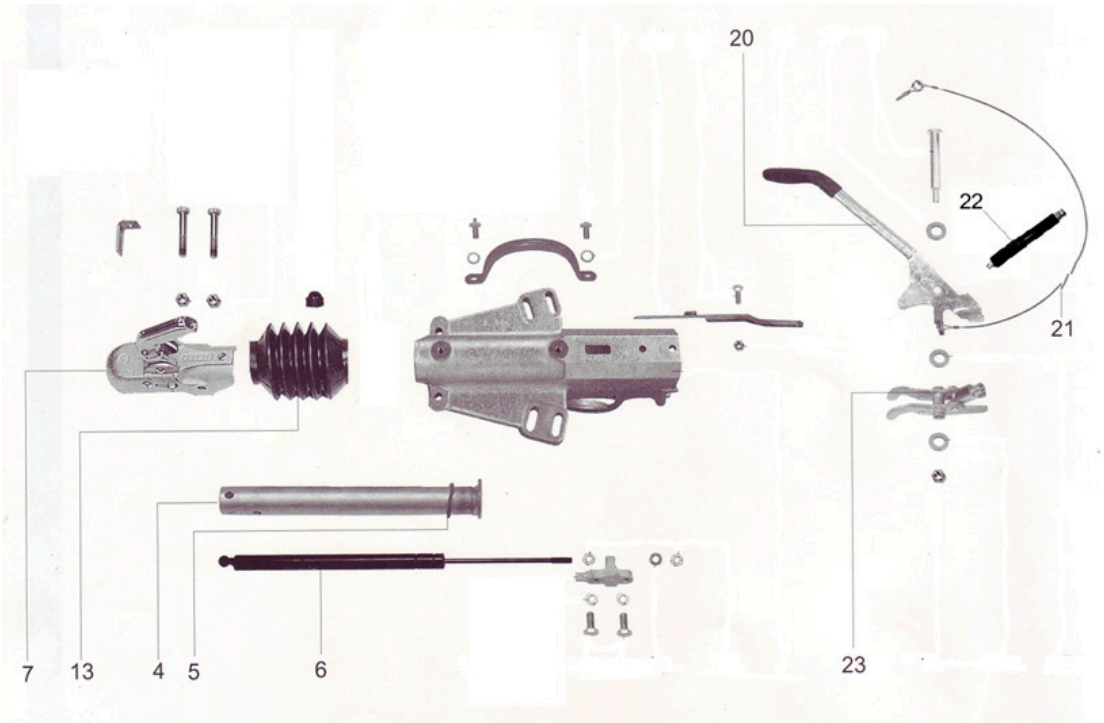

# Coupler Din Eye Heads

| Stock Code | Description | Pin Hole Size | Price Each |
|---|---|---|---|
| **CBKEYE45** | Coupler Eye 45mm Shaft | 40mm | R1,595.00 |
| **CBKEYE50** | Coupler Eye 50mm Shaft | 40mm | R 2,995.00 |
| **CBKEYE50A** | Coupler Eye 50mm 14mm Bolts | 40mm | R2,330.00 |
| **CBKEYE60** | Coupler Eye 60mm Shaft | 40mm | R2,330.00 |
| **CBKEYE45X76** | Coupler Eye 45mm Shaft | 76mm | R1,995.00 |
| **CBKEYE50X76** | Coupler Eye 50mm Shaft | 76mm | R 2,695.00 |
| **CBKEYE60X76** | Coupler Eye 60mm Shaft | 76mm | R3,110.00 |

**CBKEYE50A**

# Brake Mechanisms

## BK200 (200x50)

| No. | Stock Code | Description | Price Each |
|---|---|---|---|
| 1 | **BK200L** | Complete Brake Mechanism LHS | R 1,395.00 |
| 1 | **BK200R** | Complete Brake Mechanism RHS | R 1,395.00 |
| 2 | **BSK200.02** | Expander | R 105.00 |
| 3 | **BSK200.03** | Leading Brake Shoe (Top) | R495.00 |
| 4 | **BSK200.04** | Trailing Brake Shoe (Bottom) | R575.00 |
| 5 | **BSK200.05** | Return Spring Primary | R16.00 |
| 7 | **BSK200.07** | Retaining Spring | R 65.00 |
| 10 | **BSK200.10** | Cam Follower | R15.00 |
| 11 | **BSCRPK1** | Brake Retaining Plate | R49.00 |
| 12 | **BSK200.12** | Brake Wedge | R 35.00 |
| 14 | **BSK200.14** | Return Spring Secondary | R 40.00 |
| 16 | **BSK200.16** | Link Expander | R195.00 |
| 25 | **BSK200.25** | Brake Adjust Screw | R7.00 |

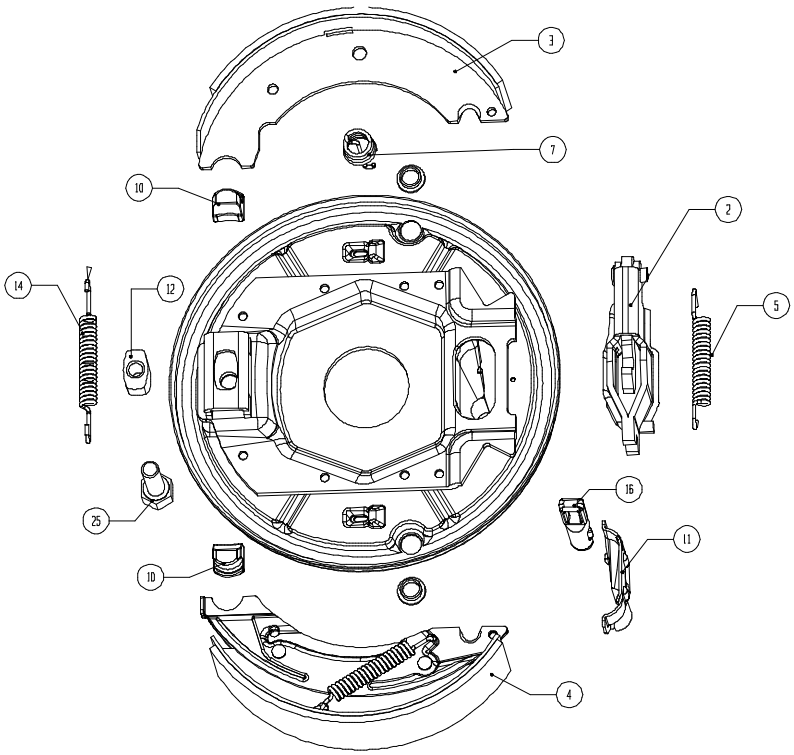

# Brake Mechanisms

## BK250B (250x40)

| No. | Stock Code | Description | Price Each |
|---|---|---|---|
| 1 | **BK250BL** | Complete Brake Mechanism LHS | R 2,395.00 |
| 1 | **BK250BR** | Complete Brake Mechanism RHS | R 2,395.00 |
| 2 | **BSK200.02** | Expander | R 105.00 |
| 3 | **BSK250B.03** | Leading Brake Shoe (Top) | R647.00 |
| 4 | **BSK250B.04** | Trailing Brake Shoe (Bottom) | R997.00 |
| 5 | **BSK250B.05** | Return Spring Primary | R17.00 |
| 7 | **BSK250B.07** | Retaining Spring | R52.00 |
| 10 | **BSK250B.10** | Cam Follower | R20.00 |
| 11 | **BSCRPK1** | Brake Retaining Plate | R49.00 |
| 12 | **BSK250B.12** | Brake Wedge | R40.00 |
| 14 | **BSK250B.14** | Return Spring Secondary | R23.00 |
| 16 | **BSK200.16** | Link Expander | R195.00 |
| 25 | **BSK250B.25** | Brake Adjust Screw | R9.00 |

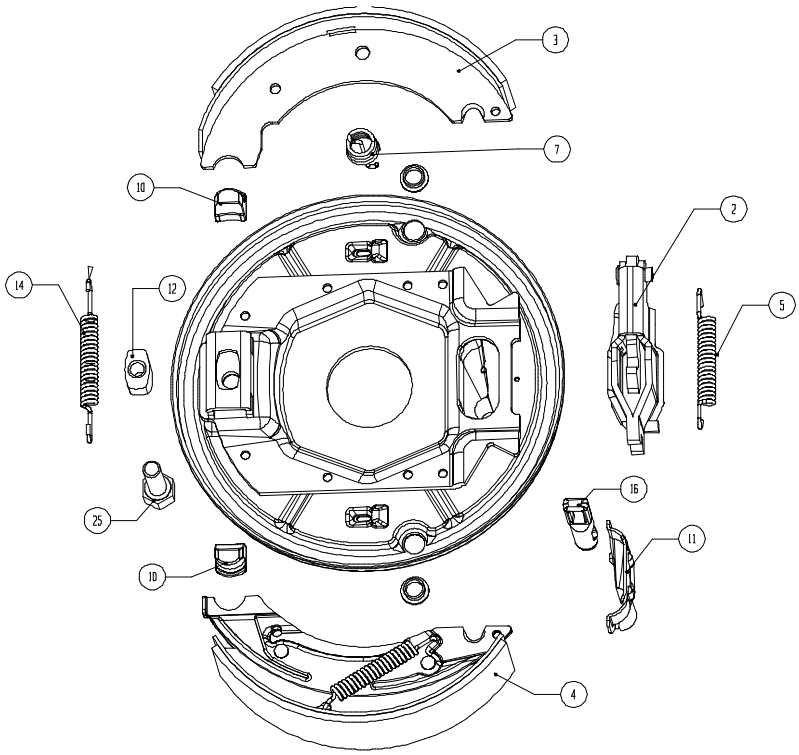

# Brake Mechanisms

## BK250A (250x50)

| No. | Stock Code | Description | Price Each |
|---|---|---|---|
| 1 | **BK250AL** | Complete Brake Mechanism LHS | R 2,395.00 |
| 1 | **BK250AR** | Complete Brake Mechanism RHS | R 2,395.00 |
| 2 | **BSK200.02** | Expander | R 105.00 |
| 3 | **BSK250A.03** | Leading Brake Shoe Top | R995.00 |
| 4 | **BSK250A.04** | Trailing Brake Shoe Bottom | R1,330.00 |
| 5 | **BSK250B.05** | Return Spring Primary | R17.00 |
| 7 | **BSK200.07** | Retaining Spring | R 65.00 |
| 10 | **BSK250B.10** | Cam Follower | R20.00 |
| 11 | **BSCRPK1** | Brake Retaining Plate | R49.00 |
| 12 | **BSK250B.12** | Brake Wedge | R40.00 |
| 14 | **BSK250B.14** | Return Spring Secondary | R23.00 |
| 16 | **BSK200.16** | Link Expander | R195.00 |
| 25 | **BSK250B.25** | Brake Adjust Screw | R9.00 |

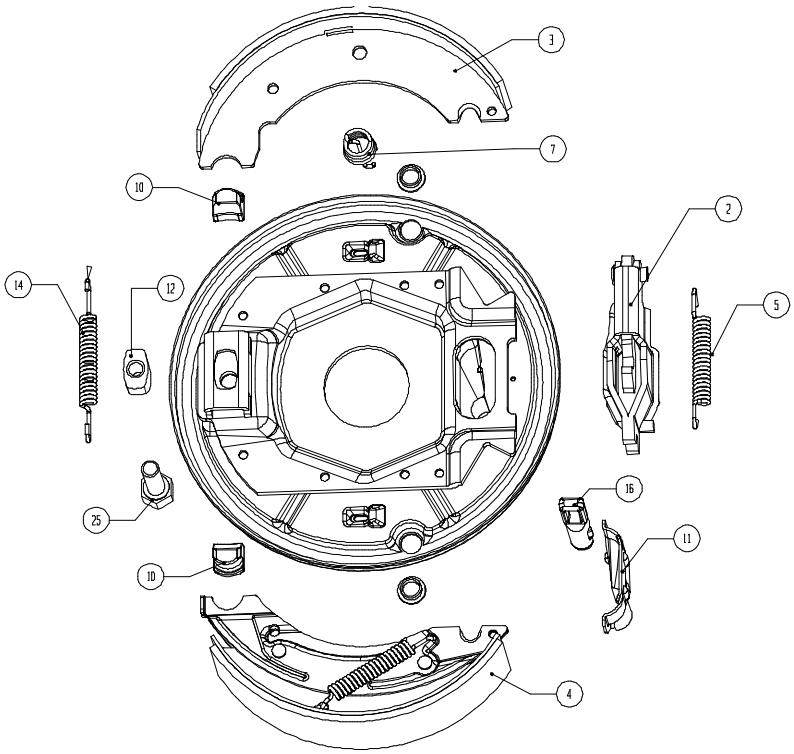

# Introduction to Pitch Circle Diameters (PCD)

The wheel studs or wheel bolts are inserted into holes drilled into the hubs. These small holes are drilled equally spaced on the circumference of a circle centred on the axis of the wheel bearings. The diameter of this circle is called the Pitch Circle Diameter or PCD. It is essential that the PCD of the hub and the PCD of the wheel correspond exactly.

The following tables show the common PCD's used in the **Burquip**'s axle and wheels range.

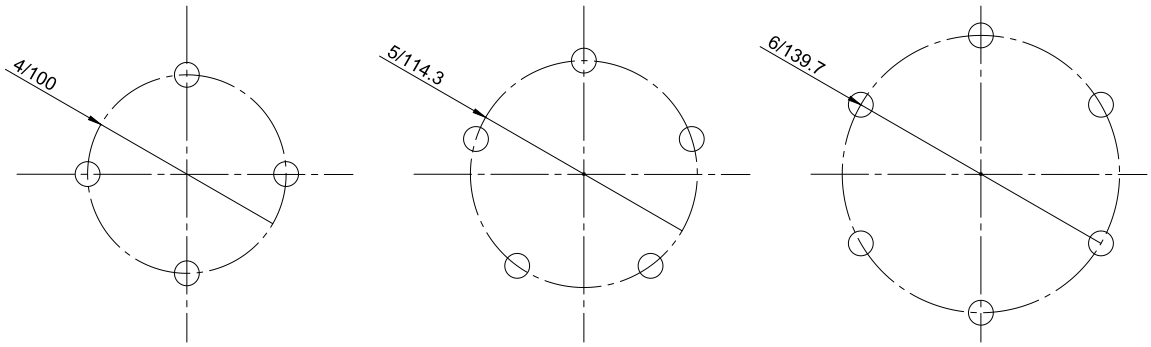


| PCD | Code | C (mm) | No of Holes (n) | Diameter (mm) |
|---|---|---|---|---|
| 4/100 | .01 | 70.711 | 4 | 100 |
| 5/114.3 | .02 | 67.184 | 5 | 114.3 |
| 5/165.1 | .03 | 97.043 | 5 | 165.1 |
| 6/139.7 | .04 | 69.850 | 6 | 139.7 |
| 6/205 | .05 | 102.500 | 6 | 205 |
| 8/275 | .06 | 105.238 | 8 | 275 |
| 5/150 | .07 | 88.168 | 5 | 150 |
| 4/114.3 | .08 | 80.822 | 4 | 114.3 |
| Special | .09 | | | |
| 10/335 | .10 | 103.521 | 10 | 335 |
| 4/139.7 | .11 | 98.783 | 4 | 139.7 |
| 5/140 | .12 | 82.290 | 5 | 140 |
| 5/112 | .13 | 65.832 | 5 | 112 |
| 5/120.65 | .14 | 70.916 | 5 | 120.65 |
| 10/225 | .15 | 69.529 | 10 | 225 |

Where C is the distance between consecutive hole centers.

Special PCD's are those that we rarely drill, e.g. 4/108; 4/101.6; 5/127, etc. If we see that a specific special PCD is becoming popular we will denote it with the next available number.

PCD are calculated according to the following formula using the symbols defined above:

$$PCD = \frac{C}{SIN\,(180^{\circ}/n)}$$

# Brake Drums
## 1600kg Axle

**Components**

| Brake Drum | Grease Cap | Split Pin | Castle Nut | Spacer | Bearings | Wheel Bolt | Oil Seal |
|---|---|---|---|---|---|---|---|
| **HBB200B.01C** | GCAP52.1 | M3.2X36SP | M18CN/M18CNW | M20BSFW | B30205 & B32007 | M12WB24 | OS42-62-7 |
| **HBB200B.02C** | GCAP52.1 | M3.2X36SP | M18CN/M18CNW | M20BSFW | B30205 & B32007 | M12WB24 | OS42-62-7 |
| **HBB200B.04C** | GCAP52.1 | M3.2X36SP | M18CN/M18CNW | M20BSFW | B30205 & B32007 | M12WB24 | OS42-62-7 |
| **HBB200B.04SC** | GCAP52.1 | M3.2X36SP | M18CN/M18CNW | M20BSFW | B30205 & B32007 | M12WS & M12WN | OS42-62-7 |

| Stock Code | Description | Price Each |
|---|---|---|
| **HBB200B.01C** | Complete Brake Drum 4/100 pcd | R1,170.00 |
| **HBB200B.02C** | Complete Brake Drum 5/114 pcd | R1,170.00 |
| **HBB200B.04C** | Complete Brake Drum 6/140 pcd | R1,170.00 |
| **HBB200B.04SC** | Complete Brake Drum 6/140 pcd with studs & nuts | R1,170.00 |
| **GCAP52.1** | Grease Cap 52mm | R27.00 |
| **M3.2X36SP** | Split Pin | R1.00 |
| **M18CN/M18CNW** | M18 Castle Nut M18x1.5/Castle Nut Flanged M18x1.5 | R21.00/R20.00 |
| **M20BSFW** | Spacer 19mmx34mmx3mm | R4.00 |
| **B30205** | Bearing 30205 | R 80.00 |
| **B32007** | Bearing 32007 | R 105.00 |
| **M12WB24** | M12 Wheel Bolt 1,5mm | R10.00 |
| **M12WS** | M12 Wheel Studs 1,5mm | R8.00 |
| **M12WN** | M12 Wheel Nuts 1,5mm | R7.00 |
| **OS42-62-7** | Oil Seal 42x62x7 | R 16.00 |

# Brake Drums
## 1800kg Axle

**Components**

| Brake Drum | Grease Cap | Split Pin | Castle Nut | Spacer | Bearings | Wheel Bolt | Oil Seal |
|---|---|---|---|---|---|---|---|
| **HBB250B.02C** | GCAP52.1 | M3.2X36SP | M18CN/M18CNW | M20BSFW | B30205 & B32007 | M12WB24 | OS42-62-7 |
| **HBB250B.04C** | GCAP52.1 | M3.2X36SP | M18CN/M18CNW | M20BSFW | B30205 & B32007 | M12WB24 | OS42-62-7 |
| **HBB250B.07C** | GCAP52.1 | M3.2X36SP | M18CN/M18CNW | M20BSFW | B30205 & B32007 | M14WSR & M14WN | OS42-62-7 |

| Stock Code | Description | Price Each |
|---|---|---|
| **HBB250B.02C** | Complete Brake Drum 5/114.3 | R1,840.00 |
| **HBB250B.04C** | Complete Brake Drum 6/140 pcd with wheel bolts | R1,840.00 |
| **HBB250B.07C** | Complete Brake Drum 5/150 pcd | R1,840.00 |
| **GCAP52.1** | Grease Cap 52mm | R27.00 |
| **M3.2X36SP** | Split Pin | R1.00 |
| **M18CN/M18CNW** | M18 Castle Nut M18x1.5/Castle Nut Flanged M18x1.5 | R21.00/R20.00 |
| **M20BSFW** | Spacer 19mmx34mmx3mm | R4.00 |
| **B30205** | Bearing 30205 | R 80.00 |
| **B32007** | Bearing 32007 | R 105.00 |
| **M12WB24** | M12 Wheel Bolt 1,5mm | R10.00 |
| **M14WSR** | M14 Wheel Studs 1,5mm | R23.00 |
| **M14WN** | M14 Wheel Nuts 1,5mm | R24.00 |
| **OS42-62-7** | Oil Seal 42x62x7 | R 16.00 |

# Brake Drums
## 2500kg Axle

**Components**

| Brake Drum | Grease Cap | Split Pin | Castle Nut | Spacer | Bearings | Wheel Bolt | Oil Seal |
|---|---|---|---|---|---|---|---|
| **HBB250A.03C** | GCAP62.1 | M4x40SP | M24CN/M24CNW | M24BSFW | B30206 & B30208 | M16WN & M16WS | OS48-80-10 |
| **HBB250A.04C** | GCAP62.1 | M4x40SP | M24CN/M24CNW | M24BSFW | B30206 & B30208 | M12WS & M12WN | OS48-80-10 |
| **HBB250A.07C** | GCAP62.1 | M4x40SP | M24CN/M24CNW | M24BSFW | B30206 & B32008 | M14WSR & M14WN | OS48-80-10 |

| Stock Code | Description | Price Each |
|---|---|---|
| **HBB250A.03C** | Complete Brake Drum 5/165 pcd | R1,840.00 |
| **HBB250A.04C** | Complete Brake Drum 6/139.7 pcd | R1,840.00 |
| **HBB250A.07C** | Complete Brake Drum 5/150 pcd | R1,840.00 |
| **GCAP62.1** | Grease Cap 62mm | R29.00 |
| **M4X40SP** | Split Pin | R1.00 |
| **M24CN/M24CNW** | M24 Castle Nut M24x1.5/Castle Nut Flanged M24x1.5 | R37.00/R30.00 |
| **M24BSFW** | Spacer 25mmx44mmx4mm | R7.00 |
| **B30206** | Bearing 30206 | R 85.00 |
| **B30208** | Bearing 30208 | R 165.00 |
| **M12WS** | M12 Wheel Studs 1,5mm | R8.00 |
| **M12WN** | M12 Wheel Nuts 1,5mm | R7.00 |
| **M14WSR** | M14 Wheel Studs 1,5mm | R23.00 |
| **M14WN** | M14 Wheel Nuts 1,5mm | R24.00 |
| **M16WN** | M16 Nuts 1,5mm | R15.00 |
| **M16WS** | M16 Wheel Studs 1,5mm | R27.00 |
| **OS48-80-10** | Oil Seal 48x80x10 | R39.00 |

Prices are exclusive of VAT and subject to change without prior notice. (E & OE Notice - pg100)

# Hubs

## 750kg Unbraked Axles

**Components**

| Hub (No. 1) | Grease Cap (No. 2) | Split Pin (No. 3) | Castle Nut (No. 4) | Spacer (No. 5) | Bearings (No. 6) | Wheel Bolt (No. 7) | Oil Seal (No. 8) |
|---|---|---|---|---|---|---|---|
| **HUB0450.01C** | GCAP47.1 | M3.2X36SP | M18CN/M18CNW | M20BSFW | B30204 & B30205 | M12WB24 | OS30-52-7 |

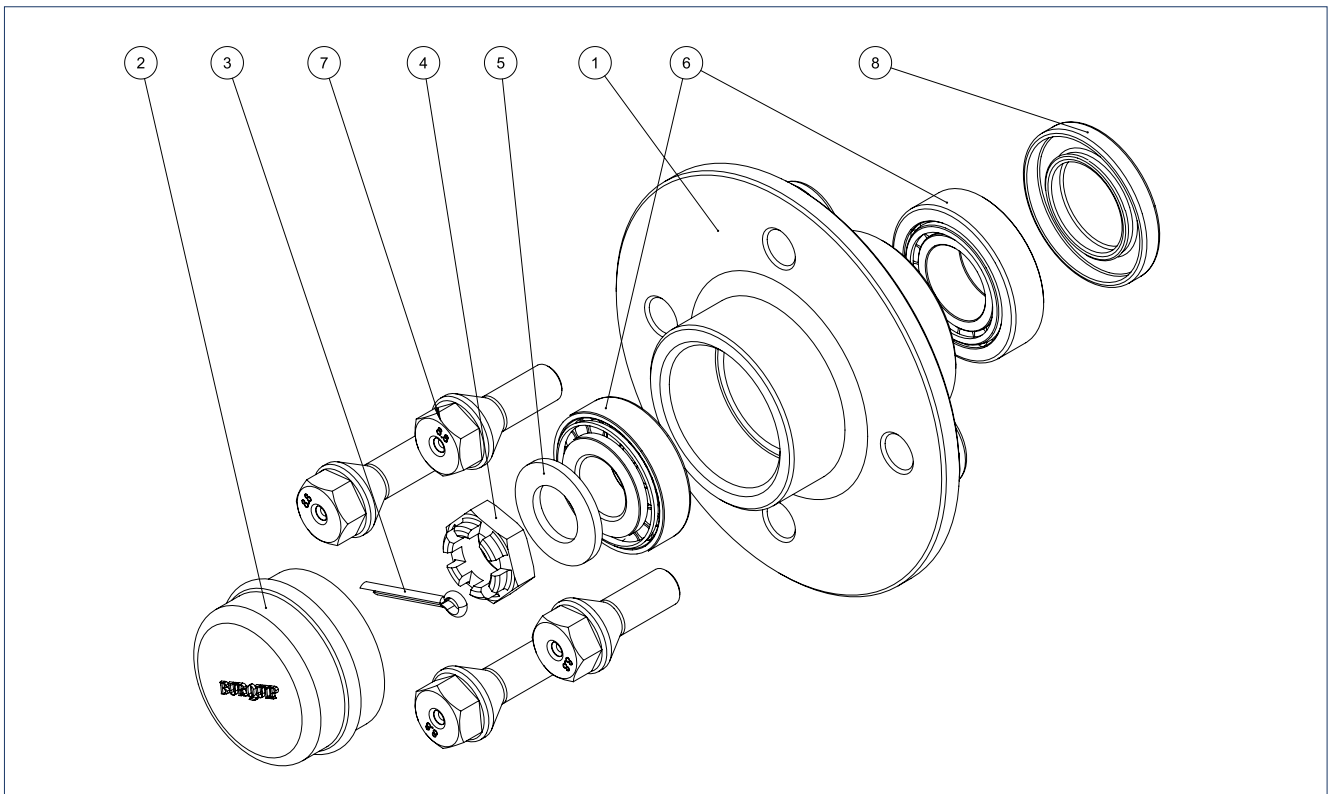


**Component Reference**

# Hubs

## 750kg Unbraked Axles

| Stock Code | Description | Price Each |
|---|---|---|
| **HUB0450.01C** | Complete Hub 4/100 pcd only, hub excludes spindle | R595.00 |
| **GCAP47.1** | Grease Cap 47mm | R23.00 |
| **M3.2x36SP** | M3,2mm Split Pin | R1.00 |
| **M18CN/M18CNW** | M18 Castle Nut M18x1.5/Castle Nut Flanged M18x1.5 | R21.00/R20.00 |
| **M20BSFW** | Spacer 19mmx34mmx3mm | R4.00 |
| **B30204** | Bearing 30204 | R 75.00 |
| **B30205** | Bearing 30205 | R 80.00 |
| **M12WB24** | M12 Wheel Bolt 1,5mm | R10.00 |
| **OS30-52-7** | Oil Seal 30x52x7 | R 15.00 |

# Hubs

## 1600kg Unbraked Axles

**Components**

| Hub (No. 1) | Grease Cap (No. 2) | Split Pin (No. 3) | Castle Nut (No. 4) | Spacer (No. 5) | Bearings (No. 6) | Wheel Bolt (No. 7) | Oil Seal (No. 8) |
|---|---|---|---|---|---|---|---|
| **HUB0800B.01C** | GCAP52.1 | M3.2X36SP | M18CN/M18CNW | M20BSFW | B30205 & B32007 | M12WB24 | OS42-62-7 |
| **HUB0800B.02C** | GCAP52.1 | M3.2X36SP | M18CN/M18CNW | M20BSFW | B30205 & B32007 | M12WB24 | OS42-62-7 |
| **HUB0800B.03C** | GCAP52.1 | M3.2X36SP | M18CN/M18CNW | M20BSFW | B30205 & B32007 | M16WN & M16WS | OS42-62-7 |
| **HUB0800B.04C** | GCAP52.1 | M3.2X36SP | M18CN/M18CNW | M20BSFW | B30205 & B32007 | M12WB24 | OS42-62-7 |
| **HUB0800B.04SC** | GCAP52.1 | M3.2X36SP | M18CN/M18CNW | M20BSFW | B30205 & B32007 | M12WS & M12WN | OS42-62-7 |
| **HUB0800B.07C** | GCAP52.1 | M3.0ARC | M18CN/M18CNW | M20BSFW | B30205 & B32007 | M14WSR & M14WN | OS42-62-7 |

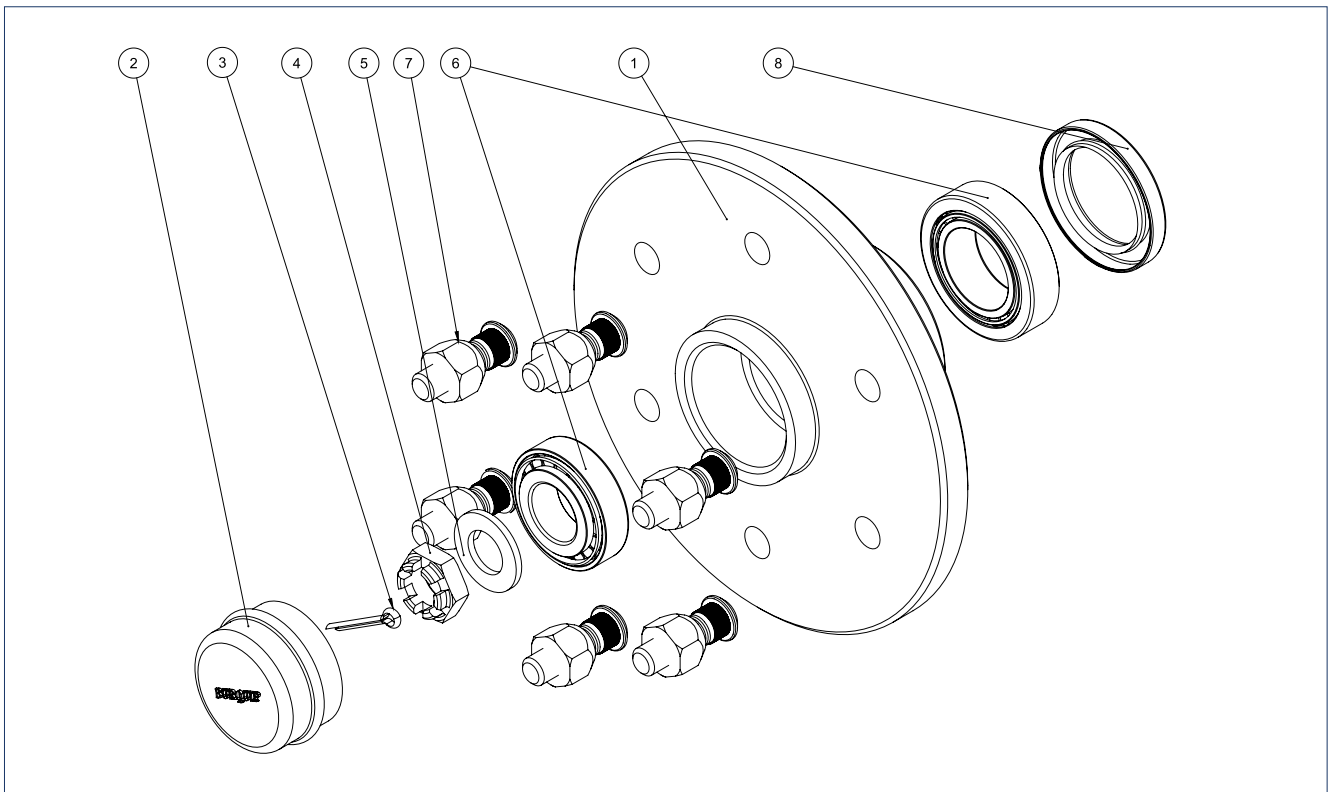


**Component Reference**

# Hubs

## 1600kg Unbraked Axles

| Stock Code | Description | Price Each |
|---|---|---|
| HUB0800B.01C | Complete Hub 4/100 pcd only, hub excludes spindle | R1,050.00 |
| HUB0800B.02C | Complete Hub 5/114.3 pcd only, hub excludes spindle | R1,050.00 |
| HUB0800B.03C | Complete Hub 5/165 pcd only, hub excludes spindle | R1,050.00 |
| HUB0800B.04C | Complete Hub 6/139.7 pcd only, hub excludes spindle | R1,050.00 |
| HUB0800B.04SC | Complete Hub 6/139.7 pcd only, hub excludes spindle | R1,050.00 |
| HUB0800B.07C | Complete Hub 5/150 pcd only, hub excludes spindle | R1,080.00 |
| GCAP52.1 | Grease Cap 47mm | R27.00 |
| M3.2x36SP | M3,2mm Split Pin | R1.00 |
| M3.0ARC | R Clip 3.0mm | R1.00 |
| M18CN/M18CNW | M18 Castle Nut M18x1.5/Castle Nut Flanged M18x1.5 | R21.00/R20.00 |
| M20BSFW | Spacer 19mmx34mmx3mm | R4.00 |
| B30205 | Bearing 30205 | R 80.00 |
| B32007 | Bearing 32007 | R 105.00 |
| M12WB24 | M12 Wheel Bolt 1,5mm | R10.00 |
| M12WS | M12 Wheel Studs 1,5mm | R8.00 |
| M12WN | M12 Wheel Nuts 1,5mm | R7.00 |
| M14WSR | M14 Wheel Studs 1,5mm | R23.00 |
| M14WN | M14 Wheel Nuts 1,5mm | R24.00 |
| M16WN | M16 Nuts 1,5mm | R15.00 |
| M16WS | M16 Wheel Studs 1,5mm | R27.00 |
| OS42-62-7 | Oil Seal 42x62x7 | R 16.00 |

# Hubs

## 2500kg Unbraked Axles

**Components**

| Hub (No. 1) | Grease Cap (No. 2) | Split Pin (No. 3) | Castle Nut (No. 4) | Spacer (No. 5) | Bearings (No. 6) | Wheel Bolt (No. 7) | Oil Seal (No. 8) |
|---|---|---|---|---|---|---|---|
| **HUB1250.02C** | GCAP62.1 | M4X40SP | M24CN/M24CNW | M24BSFW | B30206 & B30208 | M12WB24 | OS48-80-10 |
| **HUB1250.03C** | GCAP62.1 | M4X40SP | M24CN/M24CNW | M24BSFW | B30206 & B30208 | M16WN & M16WS | OS48-80-10 |
| **HUB1250.04C** | GCAP62.1 | M4X40SP | M24CN/M24CNW | M24BSFW | B30206 & B30208 | M12WB24 | OS48-80-10 |
| **HUB1250.04SC** | GCAP62.1 | M4X40SP | M24CN/M24CNW | M24BSFW | B30206 & B30208 | M12WS & M12WN | OS48-80-10 |
| **HUB1250.07C** | GCAP62.1 | M4X40SP | M24CN/M24CNW | M24BSFW | B30206 & B30208 | M14WSR & M14WN | OS48-80-10 |

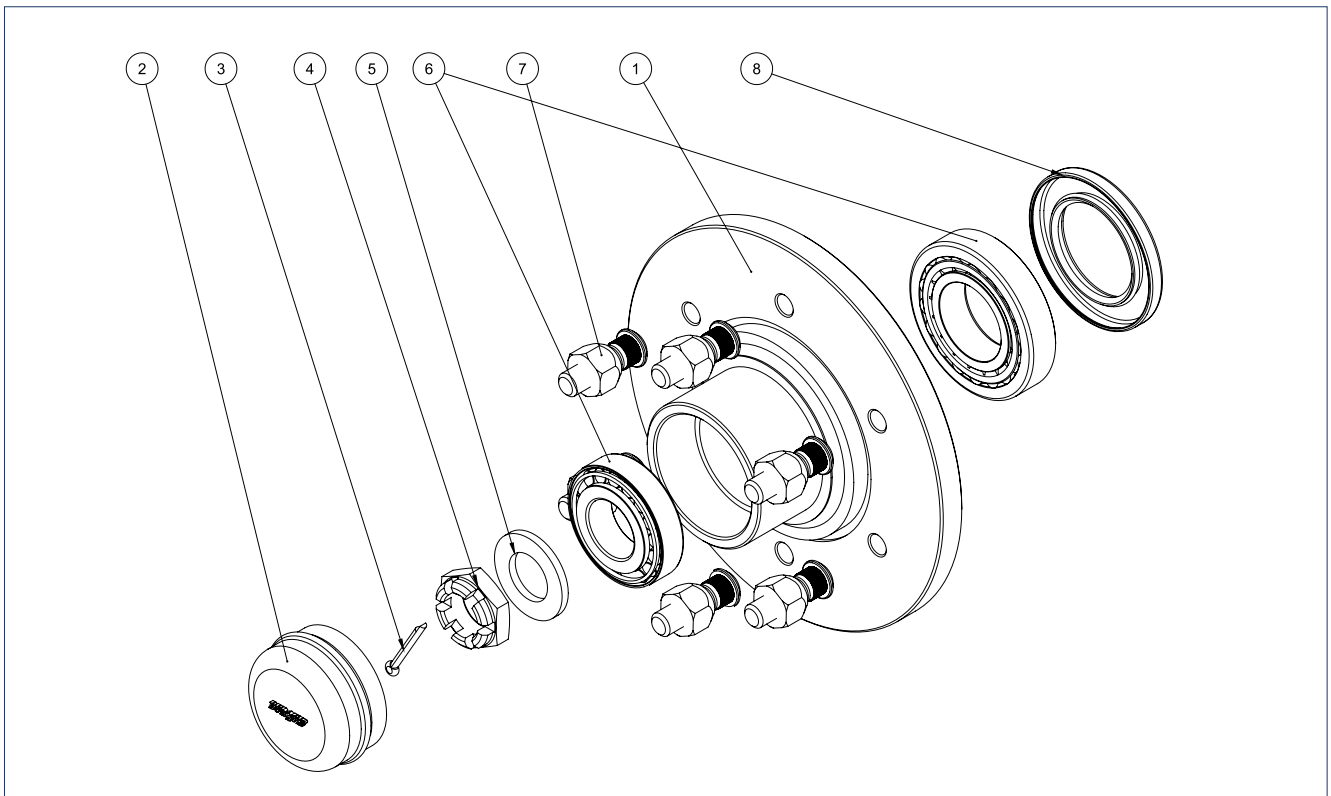


**Component Reference**

# Hubs

## 2500kg Unbraked Axles

| Stock Code | Description | Price Each |
|---|---|---|
| HUB1250.02C | Complete Hub 5/114.3 pcd, 2500kg unbraked axles | R1,220.00 |
| HUB1250.03C | Complete Hub 5/165 pcd, 2500kg unbraked axles | R1,220.00 |
| HUB1250.04C | Complete Hub 6.139.7 pcd, 2500kg unbraked axles | R1,220.00 |
| HUB1250.04SC | Complete Hub 6/139.7 pcd, 2500kg unbraked axles | R1,220.00 |
| HUB1250.07C | Complete Hub 5/150 pcd, 2500kg unbraked axles | R1,380.00 |
| GCAP62.1 | Grease Cap 62mm | R29.00 |
| M4x40SP | Split Pin M4 | R1.00 |
| M24CN/M24CNW | M24 Castle Nut M24x1.5/Castle Nut Flanged M24x1.5 | R37.00/R30 |
| M24BSFW | Spacer 25mmx44mmx4mm | R7.00 |
| B30206 | Bearing 30206 | R 85.00 |
| B30208 | Bearing 30208 | R 165.00 |
| M12WB24 | M12 Wheel Bolt 1,5mm | R10.00 |
| M12WS | M12 Wheel Studs 1,5mm | R8.00 |
| M12WN | M12 Wheel Nuts 1,5mm | R7.00 |
| M14WSR | M14 Wheel Studs 1,5mm | R23.00 |
| M14WN | M14 Wheel Nuts 1,5mm | R24.00 |
| M16WN | M16 Nuts 1,5mm | R15.00 |
| M16WS | M16 Wheel Studs 1,5mm | R27.00 |
| OS48-80-10 | Oil Seal 48x80x10 | R39.00 |

# Electrical Cable

| Image | Stock Code | Description | Price |
|---|---|---|---|
| | **EC5C** | Cable 5 Core 0.75mm<br>Sold in 5m increments | R135/5m |
| | **EC7C** | Cable 7 Core 0.75mm<br>Sold in 5m increments | R180/5m |
| | **Q-EJB001** | Electrical Junction Box | R 135.00 |

# Light Boxes

| Image | Stock Code | Description | Price |
|---|---|---|---|
| | **LB01P** | Light Box 2 Lens 110 | R77.00 |
| | **LB03P** | Light Box 1 Lens 110 | R48.00 |

# Lights

| Image | Stock Code | Description | Price |
|---|---|---|---|
| | **EL08** | Kombi light<br>100X95X50mm | R 45.00 |
| | **ELKOM** | Kombi light<br>180X95X55mm | R 85.00 |
| | **EL08LED** | Kombi light LED<br>100X100X40mm | R 225.00 |
| | **ELEDC2** | Kombi light LED 110 round | R240.00 |
| | **EL02AS**<br>**EL02A** | Lamp 110 Semi Sealed - Amber<br>Lamp Sealed, with gasket - Amber<br>(SABS Approved) | R 45.00<br>R 80.00 |
| | **EL02RS**<br>**EL02R** | Lamp 110 Semi Sealed - Red<br>Lamp Sealed, with gasket - Red<br>(SABS Approved) | R 45.00<br>R 80.00 |
| | **EL02ALED19** | Lamp LED 110 - Amber - Gasket included | R 370.00 |
| | **EL02RLED19** | Lamp LED 110 - Red - Gasket included | R370.00 |

# Lights

| Image | Stock Code | Description | Price |
|---|---|---|---|
| | **EL-DF-TRL003** | Tail Light LED<br>105.5x97.8x36.4mm | R 150.00 |
| | **EL-DF-TRL019L** | 45° Side Marker Light LED<br>150.2X141.5X56.9mm | R 200.00 |
| | **EL-DF-TRL019R** | 45° Side Marker Light LED<br>150.2X141.5X56.9mm | R 200.00 |
| | **EL-DF-TRL020** | Marker Light LED<br>Red / White<br>116.8x41.7x38.1mm | R 95.00 |
| | **EL-DF-TRL95A** | Tail Light LED Round<br>95 Diameter | R 215.00 |
| | **EL-DSF-TRL030AL** | Tail Light LED - Left<br>164.7x79.8x35.4mm<br>12V - 24V | R 215.00 |
| | **EL-DSF-TRL030AR** | Tail Light LED - Right<br>164.7x79.8x35.4mm<br>12V - 24V | R 215.00 |
| | **EL-ICL97** | Wall or Ceiling Mount LED Light<br>Single Lens<br>176x115x29mm<br>12V | R 135.00 |

# Lights

| Image | Stock Code | Description | Price |
|---|---|---|---|
| 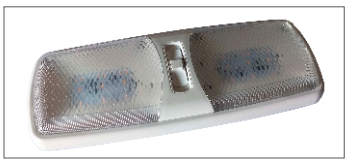 | **EL-ICL98** | Wall or Ceiling Mount LED Light<br>Double Lens<br>292x116x29mm<br>12V | R 225.00 |
| | **EL-PLL8AB** | Awning Lamp Amber - LED<br>248x87x56mm<br>12V - 24V | R 215.00 |
| | **EL-PLL8CB** | Awning Lamp Clear - LED<br>248x87x56mm<br>12V - 24V | R 215.00 |
| | **ELN12** | Number Plate Light<br>67.4x38.5x35.9mm<br>12V - 24V | R 45.00 |
| | **ELN12LED** | Number Plate Light - LED<br>100% Waterproof<br>74.6x35.5x34mm<br>12V - 24V | R 110.00 |
| | **EL02A-BQ** | Tail Lamp Sealed - Amber | R90.00 |
| | **EL02R-BQ** | Tail Lamp Sealed - Red | R90.00 |
| | **EL02ALED19-BQ** | Amber LED Light with Gasket | R165.00 |

# Lights

| Image | Stock Code | Description | Price |
|---|---|---|---|
| 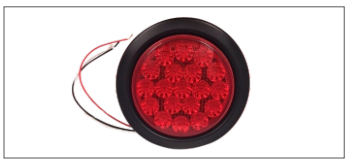 | **EL02RLED19-BQ** | Red LED Light with Gasket | R165.00 |
| | **ELEDC2-BQ** | LED - Combination Light | R175.00 |

# Plugs & Adaptors

| Image | Stock Code | Description | Price |
|---|---|---|---|
| | **E7PFMPC** | 7 Pin Female Plug - Metal | R 75.00 |
| | **E7PMPC** | 7 Pin Male Plug - Metal | R 70.00 |
| | **E7PMPPC** | 7 Pin Male Plug - Plastic | R 45.00 |
| | **E7PMPD3000-4000** | 7 Pin 3M Electric Coil | R 385.00 |
| | **E7-13** | 13 Pin to 7 Pin 12 Volt Adaptor | R 40.00 |
| 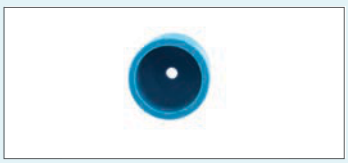 | **E7PH** | 7 Pin Male Plug Holder | R 40.00 |

# Reflective Components

| Image | Stock Code | Description | Price |
|---|---|---|---|
| | **EREFA**<br>**EREFA40** | Reflector Amber 70x35<br>Refelctor Amber 90x40 | R7.00<br>R 10.00 |
| | **EREFC**<br>**EREFC40** | Reflector Clear 70x35<br>Reflector Clear 90x40 | R7.00<br>R 10.00 |
| | **EREFR**<br>**EREFR40** | Reflector Red 70X30<br>Reflector Red 90X40 | R7.00<br>R 10.00 |
| | **ERETR150** | Reflector Red Triangle 150 | R15.00 |
| | **EBQRT** | Reflective Tape<br>Sold in 5m increments | R125/5m |
| | **EADRT** | Reflective Tape - Amber<br>Sold in 5m increments | R255.00/5m |
| | **E3M** | 3m Reflective Tape - Amber<br>Sold in 5m increments | R55.00/5m |
| | **CV1040**<br>**CV1200**<br>**CV1200S**<br>**CV1400**<br>**CV1600**<br>**CV1700**<br>**CV1700S**<br>**CV1800** | Chevron 1040mm<br>Chevron 1200mm<br>Chevron 1200mm - Stick On<br>Chevron 1400mm<br>Chevron 1600mm<br>Chevron 1700mm<br>Chevron 1700mm - Stick On<br>Chevron 1800mm | R 295.00<br>R 315.00<br>R 235.00<br>R 355.00<br>R 365.00<br>R 375.00<br>R265.00<br>R 385.00 |

Prices are exclusive of VAT and subject to change without prior notice. (E & OE Notice - pg100)

# Data Plate

| Image | Stock Code | Description | Price |
|---|---|---|---|
| | **DP001** | Data Plate | R30.00 |
| | **Z006** | Plastic single disc holder | R21.00 |
| | **Z007** | Truck disc holder (Galvanised) | R52.00 |

# Hand Winches

| Image | Stock Code | Description | Price |
|---|---|---|---|
| | **HW1760** | Hand winch 800kg double gear | R 735.00 |
| | **HW2500** | Hand winch 1135kg | R 815.00 |

# Tie-Downs

| Image | Stock Code | Description | Length | Safe Work Load | Break Strength | Price |
|---|---|---|---|---|---|---|
| | **HR25CB01** | Smart Cam Buckle | 3.05m | 182Kg | 545Kg | R150.00 |
| | **HR25RRT01** | Retractable Ratchet | 3.05m | 182Kg | 545Kg | R380.00 |
| | **HR25RT01** | Blade Ratchet | 4m | 227Kg | 682Kg | R135.00 |
| | **HR50RT01** | Ratchet & Strap | 8m | 1 667Kg | 5 000Kg | R200.00 |

# Hinges, Brackets & Fittings

| Image | Stock Code | Description | Price |
|---|---|---|---|
| | Z001 | Toggle catch & hook | R 85.00 |
| | Z002 | Heavy duty toggle latch | R157.00 |
| | Z003 | Heavy duty stiker | R37.00 |
| 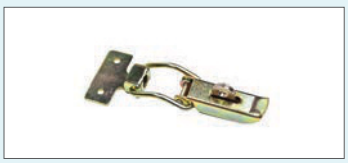 | Z004 | Toggle latch and link plate | R 125.00 |
| | Z015 | Anti-Luce short with nut | R 55.00 |
| | Z016 | Anti-Luce long with nut | R 65.00 |
| | Z017 | Anti-Luce weld on | R 50.00 |
| | Z0020 | Slide on hinge | R 65.00 |

Prices are exclusive of VAT and subject to change without prior notice. (E & OE Notice - pg100)

| Image | Stock Code | Description | Price |
|---|---|---|---|
| | **Z0021** | Heavy duty slide on hinge | R 315.00 |
| | **Z022** | Drop side hinge | R 90.00 |
| 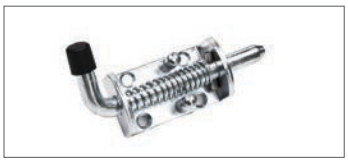 | **Z023** | Spring bolt | R 55.00 |
| | **Z027** | Short Double Bracket | R 75.00 |
| 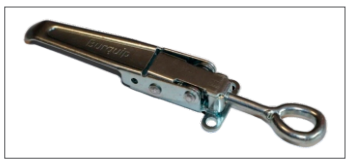 | **Z028** | Overcentre Thin Latch Adjusable 262mm Long | R 102.00 |
| | **Z029A** | Engaging Hook for Z028 - Straight | R 15.00 |
| | **Z029B** | Engaging Hook for Z028 - Bent | R 12.00 |
| | **Z030A** | Fastener with Spring Catch 206mm Long | R 65.00 |
| | **Z030B** | Fastener with Spring Catch 105mm Long | R 55.00 |

| Image | Stock Code | Description | Price |
|---|---|---|---|
| | **Z031A** | Catch Plate for Z030 - Straight | R 16.00 |
| | **Z031B** | Catch Plate for Z030 - Kink | R 20.00 |
| 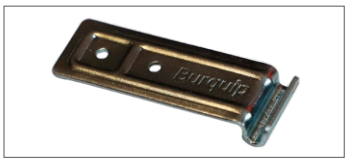 | **Z031C** | Catch Plate for Z030 - Short Bent | R 16.00 |
| | **Z031D** | Catch Plate for Z030 - Long Bent | R 22.00 |
| | **Z032** | Overcentre Wide Latch<br>219mm Long | R 115.00 |
| | **Z033** | Catch Plate for Z032 | R 30.00 |
| | **Z034** | Folding Seal Ring | R 14.00 |

# Tail Boards

| Image | Stock Code | Description | Price |
|---|---|---|---|
| | **ETAIL1220LED** | uPVC board with LED lights<br>1220mm x 152mm | R 1,065.00 |
| | **ETAIL1220** | uPVC board with incandescent lights<br>1220mm x 152mm | R700.00 |

# Mudguards

| Stock Code | Description | Wheel Size | A (mm) | B (mm) | C (mm) | Price Each |
|---|---|---|---|---|---|---|
| **MS7.13-1U** | Un-galvanised single | 10" to 13" | 660 | 241 | 227 | R195.00 |
| **MS7.13-1G** | Galvanised single | 10" to 13" | 660 | 241 | 227 | R455.00 |
| **MS7.13-2U** | Un-galvanised tandem | 10" to 13" | 1378 | 241 | 227 | R325.00 |
| **MS7.13-2G** | Galvanised tandem | 10" to 13" | 1378 | 241 | 227 | R785.00 |
| **MS7.14-1U** | Un-galvanised single | 14" | 723 | 271 | 254 | R240.00 |
| **MS7.14-1G** | Galvanised single | 14" | 723 | 271 | 254 | R545.00 |
| **MS7.14-2U** | Un-galvanised tandem | 14" | 1503 | 241 | 254 | R395.00 |
| **MS7.14-2G** | Galvanised tandem | 14" | 1503 | 241 | 254 | R915.00 |
| **MS7.15-1U** | Un-galvanised single | 15" | 862 | 303 | 297 | R295.00 |
| **MS7.15-1G** | Galvanised single | 15" | 862 | 303 | 297 | R 715.00 |
| **MS7.15-2U** | Un-galvanised tandem | 15" | 1649 | 241 | 297 | R475.00 |
| **MS7.15-2G** | Galvanised tandem | 15" | 1649 | 241 | 297 | R1,095.00 |

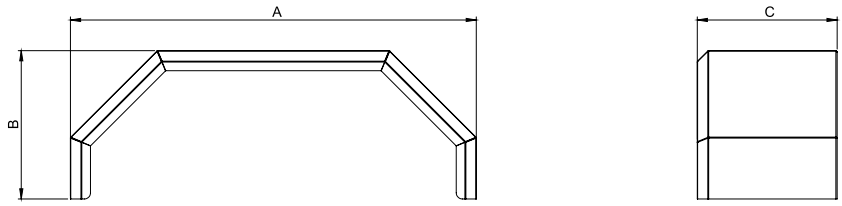

**MS7-series**

**E&OE NOTICE**

While we strive to provide accurate product and pricing information, unintentional pricing or typographical errors may occur. We reserve the right to correct any errors, inaccuracies or omissions and to change or update informa-tion (including, without limitation, images, information related to text, pricing, availability and product descriptions) at any time without notice.
Prices are subject to change without prior notice.

Johannesburg: 011 396 6000
Pretoria: 012 030 1800
Cape Town: 021 907 1900
Durban: 031 792 1020

information@burquip.co.za

Burquip

www.burquip.co.za