EST MASS: 75.07 Kg TOT SURFACE AREA: 3105597.77mm²

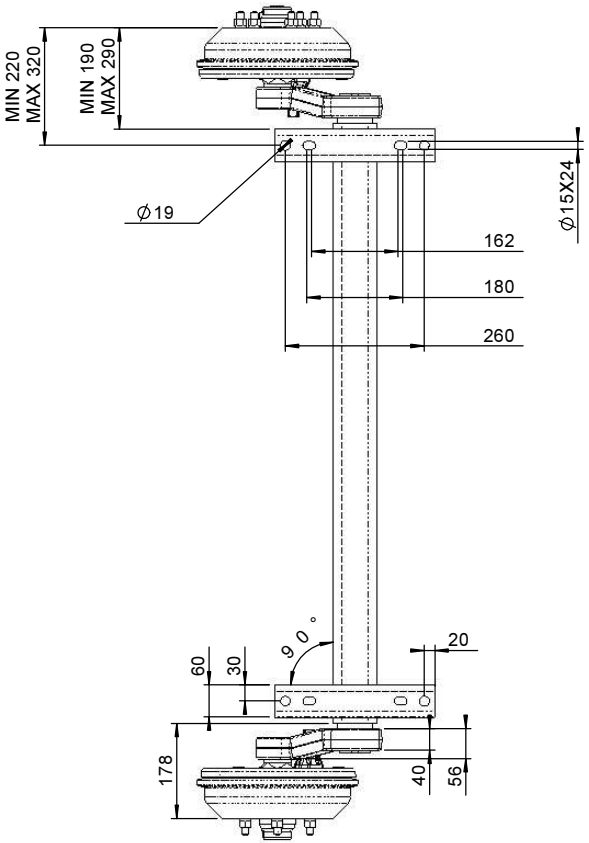

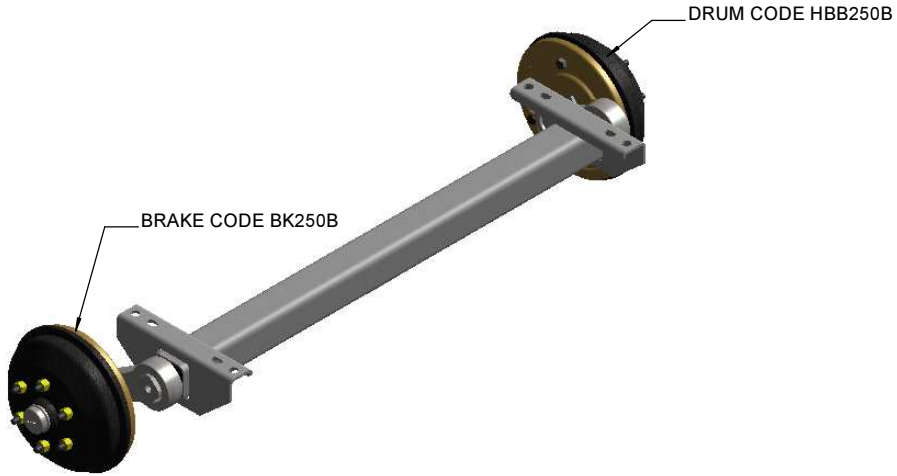

NOTES:

1 STANDARD TOE IN IS BETWEEN 0.2° & 0.6°
STANDARD CAMER IS BETWEEN -0.6° TO -1.4°
2 TANDEM TOE IN IS 0°
TANDEM CAMBER IS BETWEEN -0.6° AND -1.4°.

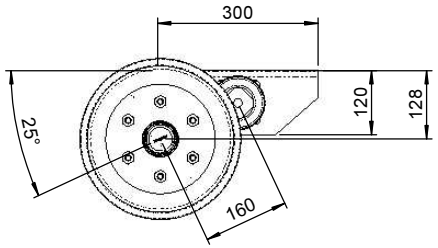

STANDARD ANGLE 25°
OPTIONAL 45°, 15°, 0°
-45°, -25°, -15°

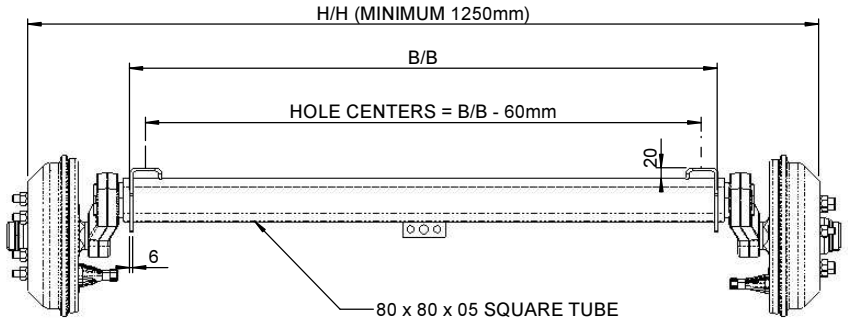

© COPYRIGHT *BURQUIP* INTERNATIONAL (Pty) Ltd

ASSUME A TOLERANCE OF ±1mm FOR DIMENSIONS WITHOUT TOLERANCES
ALL DIMENSIONS IN mm UNLESS OTHERWISE SHOWN

TITLE:

PRODUCT: **ARC1300/1800-1**

BURQUIP

SCALE: 1:10 SHEET: A3
DRAWN BY: HILTON MILLWARD
DATE: 2007-06-28

DRAWING NO. **ARC1300-1800-1** SHEET 1 of 1 REV **P1**

REV	DESCRIPTION OF CHANGE	ZONE	AUTH NO.	BY	DATE
P1	RELEASED				